CONTACTORS

MINIATURE CONTACTORS

Page 1-2

- Width 35 and 45 mm
- 4 to 7.5 kW (400 V) ... AC3
- 8.5 to 15.5 A (400 V) ... AC3
- UL, CSA, EAC
- AC or DC control voltages
- Accessories

CONTACTORS KNL6 - KNL38

Page 1-19

- Width 45 mm
- 4 to 18.5 kW (400 V) ... AC3
- 9 to 38 A (400 V) ... AC3
- UL, CSA, EAC
- AC control voltages
- Accessories

CONTACTORS KNL6G - KNL38G

Page 1-19

- Width 45 mm
- 4 to 18.5 kW (400 V) ... AC3
- 9 to 38 A (400 V) ... AC3
- UL, CSA, EAC
- DC control voltages
- Accessories

CONTACTORS KNL43 - KNL75

Page 1-46

- Width 65 mm
- 22 to 37 kW (400 V) ... AC3
- 43 to 70 A (400 V) ... AC3
- UL, EAC
- AC control voltages
- Accessories

CONTACTORS KNL95 - KNL630/1000

Page 1-67

- 50 to 335 kW (400 V) ... AC3
- UL, EAC
- AC/DC control voltages
- Accessories

OUR PRODUCT LINES INCLUDE ALL KINDS OF CONTACTORS FROM 2.2 KW UP TO 335 KW. THEY CAN BE CONTROLLED BY DIFFERENT CONTROL VOLTAGES FROM 12 V UP TO 500 V. THE ACCESSORIES INCLUDE MANY DIFFERENT KINDS OF AUXILIARY CONTACTS, MECHANICAL INTERLOCKS, RC SUPPRESSORS, THERMAL OVERLOAD RELAYS AND EQUIPMENT FOR ASSEMBLING. SPECIAL CONTACTORS ARE USED FOR SWITCHING CAPACITOR BANKS FROM 12.5 KVAR UP TO 60 KVAR.

CONTACTORS ARE ELECTRICALLY REMOTE CONTROLLED SWITCHES USED FOR SWITCHING A POWER CIRCUIT. CONTACTORS ARE MAINLY USED FOR SWITCHING MOTORS, BUILDING AUTOMATION SYSTEMS AND APPLICATIONS INCLUDING USE IN MACHINES.

FOR UNIVERSAL SWITCHING:

- All kind of motors
- Building automation systems
- Applications include use in machines

ADVANCED OPERATION:

- Control combinations

OTHER BENEFITS:

- A wide variety of snap-on auxiliary switch blocks and accessories
- AC or real DC drive with low consumption
- High contact reliability at low voltage
- Two contactor widths: 35 and 45 mm
- Degree of protection IP 20
- K07F version for fast-on connection or
- KO7X contactors with soldering pins
- Possibility of direct connection of the BR 6 bimetal relay for protection against overload and in case of phase failure
- Version with all four main contacts (Sp4)
- Wide range of control voltages is avalible

ORDERING DATA

AC and DC contactor relays ..... page 1-3
AC and DC motor contactors ..... page 1-4
Accessories ..... page 1-6

Example for Ordering data ..... page 1-8
Technical characteristics ..... page 1-9
Dimensions ..... page 1-17

CONTACTOR RELAYS

AC-15 acc. to IEC/EN 60947-5-1 (4-pole, 35 mm widths)

AC

Type	Rated current I_e	Control voltage 50/60 Hz	Wiring diagram	Ordering No.	Weight (g)	Packaging (pcs)
K03C-22 Q7	4 A	380/415 V	A1 13 21 31 43 / A2 14 22 32 44	30.041.215	160	10
K03C-22 M7	4 A	220/240 V		30.041.156	160	10
K03C-22 B7	4 A	24 V		30.040.307	160	10
K03C-31 Q7	4 A	380/415 V	A1 13 21 33 43 / A2 14 22 34 44	30.041.216	160	10
K03C-31 M7	4 A	220/240 V		30.041.155	160	10
K03C-31 B7	4 A	24 V		30.040.306	160	10
K03C-40 Q7	4 A	380/415 V	A1 13 23 33 43 / A2 14 24 34 44	30.041.217	160	10
K03C-40 M7	4 A	220/240 V		30.041.154	160	10
K03C-40 B7	4 A	24 V		30.040.310	160	10

AC-15 acc. to IEC/EN 60947-5-1 (4-pole, 45 mm widths)

AC

Type	Rated current I_e	Control voltage 50/60 Hz	Wiring diagram	Ordering No.	Weight (g)	Packaging (pcs)
K07C-22 Q7	4 A	380/415 V	A1 13 21 31 43 / A2 14 22 32 44	30.041.291	180	10
K07C-22 M7	4 A	220/240 V		30.041.124	180	10
K07C-22 B7	4 A	24 V		30.040.701	180	10
K07CF-22 Q7	4 A	380/415 V		30.041.292	180	10
K07CF-22 M7	4 A	220/240 V		30.041.189	180	10
K07CF-22 B7	4 A	24 V		30.041.293	180	10
K07CX-22 Q7	4 A	380/415 V		30.041.298	180	10
K07CX-22 M7	4 A	220/240 V		30.041.299	180	10
K07CX-22 B7	4 A	24 V		30.041.300	180	10
K07C-31 Q7	4 A	380/415 V	A1 13 21 33 43 / A2 14 22 34 44	30.041.221	180	10
K07C-31 M7	4 A	220/240 V		30.041.170	180	10
K07C-31 B7	4 A	24 V		30.040.339	180	10
K07CF-31 Q7	4 A	380/415 V		30.041.294	180	10
K07CF-31 M7	4 A	220/240 V		30.041.190	180	10
K07CF-31 B7	4 A	24 V		30.041.295	180	10
K07CX-31 Q7	4 A	380/415 V		30.041.301	180	10
K07CX-31 M7	4 A	220/240 V		30.041.302	180	10
K07CX-31 B7	4 A	24 V		30.041.303	180	10
K07C-40 Q7	4 A	380/415 V	A1 13 23 33 43 / A2 14 24 34 44	30.041.222	180	10
K07C-40 M7	4 A	220/240 V		30.041.125	180	10
K07C-40 B7	4 A	24 V		30.040.340	180	10
K07CF-40 Q7	4 A	380/415 V		30.041.296	180	10
K07CF-40 M7	4 A	220/240 V		30.041.136	180	10
K07CF-40 B7	4 A	24 V		30.041.297	180	10
K07CX-40 Q7	4 A	380/415 V		30.041.304	180	10
K07CX-40 M7	4 A	220/240 V		30.041.305	180	10
K07CX-40 B7	4 A	24 V		30.041.306	180	10

AC-15 acc. to IEC/EN 60947-5-1 (4-pole, 45 mm widths)

DC

Type	Rated current I_e	Control voltage	Wiring diagram	Ordering No.	Weight (g)	Packaging (pcs)
K07CG-22 MD	4 A	220 V	A1 13 21 31 43 / A2 14 22 32 44	30.040.110	220	10
K07CG-22 ED	4 A	48 V		30.040.109	220	10
K07CG-22 BD	4 A	24 V		30.040.107	220	10
K07CGX-22 MD	4 A	220 V		30.041.329	220	10
K07CGX-22 ED	4 A	48 V		30.041.330	220	10
K07CGX-22 BD	4 A	24 V		30.041.331	220	10
K07CG-31 MD	4 A	220 V	A1 13 21 33 43 / A2 14 22 34 44	30.040.106	220	10
K07CG-31 ED	4 A	48 V		30.040.105	220	10
K07CG-31 BD	4 A	24 V		30.040.103	220	10
K07CGX-31 MD	4 A	220 V		30.041.332	220	10
K07CGX-31 ED	4 A	48 V		30.041.333	220	10
K07CGX-31 BD	4 A	24 V		30.041.334	220	10
K07CG-40 MD	4 A	220 V	A1 13 23 33 43 / A2 14 24 34 44	30.040.102	220	10
K07CG-40 ED	4 A	48 V		30.040.101	220	10
K07CG-40 BD	4 A	24 V		30.040.099	220	10
K07CGX-40 MD	4 A	220 V		30.041.335	220	10
K07CGX-40 ED	4 A	48 V		30.041.336	220	10
K07CGX-40 BD	4 A	24 V		30.041.337	220	10

MOTOR CONTACTORS

AC-3 acc. to IEC/EN 60947-4-1 (4-pole, 35 mm widths)

AC

Type	Rated current I_e	Control voltage 50/60 Hz	Wiring diagram	Ordering No.	Weight (g)	Packaging (pcs)
K03M-01 Q7	8.5 A	380/415 V	A1 1 3 5 21 / A2 2 4 6 22	30.041.218	160	10
K03M-01 M7	8.5 A	220/240 V		30.041.157	160	10
K03M-01 B7	8.5 A	24 V		30.040.277	160	10
K03M-10 Q7	8.5 A	380/415 V	A1 1 3 5 13 / A2 2 4 6 14	30.041.220	160	10
K03M-10 M7	8.5 A	220/240 V		30.041.153	160	10
K03M-10 B7	8.5 A	24 V		30.040.279	160	10
K03M-10/Sp4 Q7	8.5 A	380/415 V	A1 1 3 5 7 / A2 2 4 6 8	30.041.290	160	10
K03M-10/Sp4 M7	8.5 A	220/240 V		30.041.144	160	10
K03M-10/Sp4 B7	8.5 A	24 V		30.041.023	160	10

AC-3 acc. to IEC/EN 60947-4-1 (4-pole, 45 mm widths)

AC

Type	Rated current I_e	Control voltage 50/60 Hz	Wiring diagram	Ordering No.	Weight (g)	Packaging (pcs)
K07M-01 Q7	11.3 A	380/415 V	A1 1 3 5 21 / A2 2 4 6 22	30.041.274	180	10
K07M-01 M7	11.3 A	220/240 V		30.041.172	180	10
K07M-01 B7	11.3 A	24 V		30.040.743	180	10
K07MF-01 Q7	11.3 A	380/415 V		30.041.312	180	10
K07MF-01 M7	11.3 A	220/240 V		30.041.192	180	10
K07MF-01 B7	11.3 A	24 V		30.040.196	180	10
K07MX-01 Q7	11.3 A	380/415 V		30.041.318	180	10
K07MX-01 M7	11.3 A	220/240 V		30.041.319	180	10
K07MX-01 B7	11.3 A	24 V		30.041.320	180	10
K08M-01 Q7	15.5 A	380/415 V		30.041.323	180	10
K08M-01 M7	15.5 A	220/240 V		30.041.324	180	10
K08M-01 B7	15.5 A	24 V		30.041.325	180	10
K07M-10 Q7	11.3 A	380/415 V	A1 1 3 5 13 / A2 2 4 6 14	30.041.231	180	10
K07M-10 M7	11.3 A	220/240 V		30.041.173	180	10
K07M-10 B7	11.3 A	24 V		30.040.700	180	10
K07MF-10 Q7	11.3 A	380/415 V		30.041.313	180	10
K07MF-10 M7	11.3 A	220/240 V		30.041.193	180	10
K07MF-10 B7	11.3 A	24 V		30.041.314	180	10
K07MX-10 Q7	11.3 A	380/415 V		30.041.321	180	10
K07MX-10 M7	11.3 A	220/240 V		30.041.322	180	10
K07MX-10 B7	11.3 A	24 V		30.041.148	180	10
K08M-10 Q7	15.5 A	380/415 V		30.041.326	180	10
K08M-10 M7	15.5 A	220/240 V		30.041.327	180	10
K08M-10 B7	15.5 A	24 V		30.041.328	180	10
K07M-10/Sp4 Q7	11.3 A	380/415 V	A1 1 3 5 7 / A2 2 4 6 8	30.041.273	180	10
K07M-10/Sp4 M7	11.3 A	220/240 V		30.041.146	180	10
K07M-10/Sp4 B7	11.3 A	24 V		30.041.045	180	10
K07M-22/Sp4 Q7	10 A	380/415 V	A1 1 R3 R5 7 / A2 2 R4 R6 8	30.041.307	180	10
K07M-22/Sp4 M7	10 A	220/240 V		30.041.176	180	10
K07M-22/Sp4 B7	10 A	24 V		30.041.076	180	10
K07M-04/Sp4 Q7	11.3 A	380/415 V	A1 R1 R3 R5 R7 / A2 R2 R4 R6 R8	30.041.241	180	10
K07M-04/Sp4 M7	11.3 A	220/240 V		30.041.177	180	10
K07M-04/Sp4 B7	11.3 A	24 V		30.041.060	180	10
K07M-01/Sp4 Q7	11.3 A	380/415 V	A1 1 3 5 R7 / A2 2 4 6 R8	30.041.223	180	10
K07M-01/Sp4 M7	11.3 A	220/240 V		30.041.175	180	10
K07M-01/Sp4 B7	11.3 A	24 V		30.041.308	180	10
K07MF-22 Q7	10 A	380/415 V	A1 1 R3 R5 7 / A2 2 R4 R6 8	30.041.309	180	10
K07MF-22 M7	10 A	220/240 V		30.041.310	180	10
K07MF-22 B7	10 A	24 V		30.041.311	180	10
K07MX-22 Q7	10 A	380/415 V		30.041.315	180	10
K07MX-22 M7	10 A	220/240 V		30.041.316	180	10
K07MX-22 B7	10 A	24 V		30.041.317	180	10

TAGS IN TITLE:

M - motor contactor
C - contactor relay
Sp4 - version with all four main contacts
F - contactor for fast-on connection
X - contactor with soldering pins

MOTOR CONTACTORS

AC-3 acc. to IEC/EN 60947-4-1 (4-pole, 45 mm widths)

DC

Type	Rated current I_e	Control voltage	Wiring diagram	Ordering No.	Weight (g)	Packaging (pcs)
K07MG-01 Q7	11.3 A	220 V		30.040.098	220	10
K07MG-01 M7	11.3 A	48 V		30.040.097	220	10
K07MG-01 B7	11.3 A	24 V		30.040.095	220	10
K07MGX-01 Q7	11.3 A	220 V	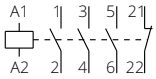	30.041.344	220	10
K07MGX-01 M7	11.3 A	48 V		30.041.345	220	10
K07MGX-01 B7	11.3 A	24 V		30.041.069	220	10
K08MG-01 Q7	15.5 A	220 V		30.041.347	220	10
K08MG-01 M7	15.5 A	48 V		30.041.348	220	10
K08MG-01 B7	15.5 A	24 V		30.041.349	220	10
K07MG-10 Q7	11.3 A	220 V		30.040.094	220	10
K07MG-10 M7	11.3 A	48 V		30.040.093	220	10
K07MG-10 B7	11.3 A	24 V		30.040.091	220	10
K07MGX-10 Q7	11.3 A	220 V	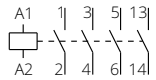	30.040.092	220	10
K07MGX-10 M7	11.3 A	48 V		30.041.346	220	10
K07MGX-10 B7	11.3 A	24 V		30.041.090	220	10
K08MG-10 Q7	15.5 A	220 V		30.041.350	220	10
K08MG-10 M7	15.5 A	48 V		30.041.351	220	10
K08MG-10 B7	15.5 A	24 V		30.041.352	220	10
K07MG-10/Sp4 Q7	11.3 A	220 V	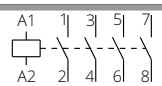	30.041.068	220	10
K07MG-10/Sp4 M7	11.3 A	48 V		30.041.287	220	10
K07MG-10/Sp4 B7	11.3 A	24 V		30.040.703	220	10
K07MG-22/Sp4 Q7	10 A	220 V	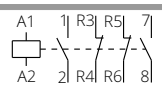	30.041.243	220	10
K07MG-22/Sp4 M7	10 A	48 V		30.041.339	220	10
K07MG-22/Sp4 B7	10 A	24 V		30.041.105	220	10
K07MG-04/Sp4 Q7	11.3 A	220 V	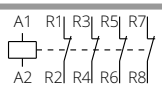	30.041.340	220	10
K07MG-04/Sp4 M7	11.3 A	48 V		30.041.341	220	10
K07MG-04/Sp4 B7	11.3 A	24 V		30.041.140	220	10
K07MG-01/Sp4 Q7	11.3 A	220 V	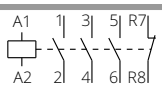	30.041.070	220	10
K07MG-01/Sp4 M7	11.3 A	48 V		30.041.342	220	10
K07MG-01/Sp4 B7	11.3 A	24 V		30.041.343	220	10

TAGS IN TITLE:

M - motor contactor
C - contactor relay
Sp4 - version with all four main contacts
F - contactor for fast-on connection
X - contactor with soldering pins
G - DC contactor

SNAP-ON AUXILIARY SWITCH BLOCKS

AC-15 acc. to IEC/EN 60947-5-1 (2-pole)

Type	Rated current I_e	Wiring diagram	Ordering No.	Weight (g)	Packaging (pcs)
ND2C-20	6 A	53 63 / 54 64	38.421.982	20	60
ND2C-02	6 A	51 61 / 52 62	38.421.984	20	60
ND2C-11	6 A	53 61 / 54 62	38.421.983	20	60
ND2M-20	6 A	53 63 / 54 64	38.423.465	20	60
ND2M-02	6 A	51 61 / 52 62	38.421.981	20	60
ND2M-11	6 A	51 63 / 52 64	38.421.980	20	60

AC-15 acc. to IEC/EN 60947-5-1 (4-pole)

Type	Rated current I_e	Wiring diagram	Ordering No.	Weight (g)	Packaging (pcs)
ND4C-40	6 A	53 63 73 83 / 54 64 74 84	38.421.975	36	40
ND4C-04	6 A	51 61 71 81 / 52 62 72 82	38.421.979	36	40
ND4C-31	6 A	53 61 73 83 / 54 62 74 84	38.421.976	36	40
ND4C-13	6 A	53 61 71 81 / 54 62 72 82	38.421.978	36	40
ND4C-22	6 A	51 61 73 83 / 52 62 74 84	38.421.977	36	40
ND4M-40	6 A	53 63 73 83 / 54 64 74 84	38.423.466	36	40
ND4M-04	6 A	51 61 71 81 / 52 62 72 82	38.423.467	36	40
ND4M-31	6 A	51 63 73 83 / 52 64 74 84	38.421.972	36	40
ND4M-13	6 A	51 61 71 83 / 52 62 72 84	38.421.974	36	40
ND4M-22	6 A	51 61 73 83 / 52 62 74 84	38.421.973	36	40

Mechanical interlock

Type	Ordering No.	Weight (g)	Packaging (pcs)
MB7	38.422.210	12	10

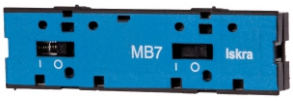

RC suppressor

Type	Control voltage U_c	Wiring diagram	Ordering No.	Weight (g)	Packaging (pcs)
RC1-K0X	12 - 48 V	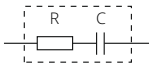	30.017.070	16	10
RC2-K0X	48 - 250 V		30.017.071	16	10
RC3-K0X	250 - 380 V		30.017.072	16	10
RC4-K0X	380 - 600 V		30.017.073	16	10

DI suppressor (for DC contactors)

Type	Control voltage U_c	Wiring diagram	Ordering No.	Weight (g)	Packaging (pcs)
DI-K0X	6 - 250 V		30.017.080	16	10

Rigid connecting kits

Type	Discription	Ordering No.	Weight (g)	Packaging (pcs)
WK 1.1	For reversing switch, suitable for contactors: 2.2-5.5 kW (for miniature contactors K03, K07) (max. current 16 A)	655200013000	26	1
WK 1.2	For star-delta starters, suitable for contactors: 2.2-5.5 kW (for miniature contactors K03, K07) (max. current 16 A), 5 terminals in line (3 main terminals, 1 auxiliary terminal, 1 coil terminal)	655200017000	18	1

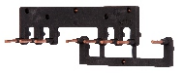

BR6 THERMAL OVERLOAD RELAY

up to 14 A for K07 contactors

Type	Setting range (A)	Max. backup fuse for Coordination 1 (A)	Max. backup fuse for Coordination 2 (A)	Ordering No.	Weight (g)	Packaging (pcs)
BR6-0.16	0.11 ... 0.16	20	0.5	30.115.002	80	1
BR6-0.25	0.16 ... 0.25	20	1	30.115.003	80	1
BR6-0.4	0.25 ... 0.4	20	2	30.115.004	80	1
BR6-0.6	0.4 ... 0.6	20	2	30.115.005	80	1
BR6-0.9	0.6 ... 0.9	20	4	30.115.006	80	1
BR6-1.3	0.9 ... 1.3	20	4	30.115.007	80	1
BR6-1.9	1.3 ... 1.9	20	6	30.115.008	80	1
BR6-2.8	1.9 ... 2.8	20	6	30.115.013	80	1
BR6-4	2.8 ... 4	20	10	30.115.009	80	1
BR6-6	4 ... 6	20	10	30.115.010	80	1
BR6-9	6 ... 9	20	16	30.115.011	80	1
BR6-11	8 ... 11	25	20	30.115.014	80	1
BR6-14	11 ... 14	35	25	30.115.012	80	1
BR6-15.5	13 ... 15.5	35	25	30.115.019	80	1

DESCRIPTION OF THE OPERATING MEANS:

- **OFF:** NC contact 95-96 is opened while the pushbutton is pressed and held.
- **RESET:** both contacts (NO and NC) return to the normal position (contact 95-96 closes and 97-98 opens). Automatic (A) or manual (H) operation.
- **TEST:** both contacts (NO and NC) change state from the normal state (contact 95-96 opens, contact 97-98 closes) until RESET push-button is pressed (manual mode) or the TEST lever is held (automatic mode).

ORDERING DATA

Standard control voltages and designations (AC)

V (50/60 Hz)	24	42	48	110/125	220/240	380/415	440	500
Designations	B7	D7	E7	F7	M7	Q7	R7	S7

Standard control voltages and designations (DC)

V	12	24	48	60	72	110	125	220
Designations	JD	BD	ED	ND	SD	FD	GD	MD

K07M – 01 – M7

- M7 — Control voltage
- 01 — Version of contacts
- K07M — Type

NOTE:

The type designation and control voltage are stated when oredring the contactors. When ordering snap-on auxiliary switch blocks, only the type is stated.

EXAMPLE: **ND4M-22**

K03M, K07M, K07MF, K07MX, K07MG, K07MGF, K07MGX, K08M, K08MG

	Type	Symbol	Unit	K03M	K07M K07MF K07MX	K07MG K07MGF K07MGX	K08MG	K08M
GENERAL	Standards			IEC/EN 60947-5-1, IEC 60947-4-1, UL 508				
	Approvals			CE, UL, CSA, EAC			CE, EAC	
	Module width		mm	35	45			
	Number of poles			4				
	Degree of protection			IP20				
	Pollution degree			3				
	Climatic conditions			95 % relative humidity				
	Ambient temperature:							
	open		°C	-20 ... +60				
	closed		°C	-20 ... +45				
	Storage temperature		°C	-30 ... +80				
	Maximum altitude U_i and U_e is reduced for 1.2 % and I_e for 0.4 % for every additional 100 m		m	2000				
	Number of contactors or switches side-by-side:							
	≤40 °C			no limitation				
	(40 ... 55) °C			no limitation				
	Noise level (operation)		dB	30	30	20	20	30
	Maximum operating frequency with no load		op. c./h	3.000				
	Mechanical endurance		op. c.	10.000.000				
	Weight		g	160	170	215	215	170
MAIN CIRCUIT	Contact reliability			≥17 V; ≥50 mA				
	Power dissipation per pole		W	1.2				
	Overload current withstand capability - 10 s			68	90.4	90.4	124	124
	Maximum back-up fuse for short-circuit protection gL and gG: coordination type 2		A	25				
	Rated insulation voltage	U_i	V	690				
	Rated impulse withstand voltage	U_{imp}	kV	6				
	Rated operational voltage	U_e	V	690				
	Rated frequency	f	Hz	50/60				
	Thermal current	I_{th}	A	20				
	Rated operational current for AC-1, AC-7a and AC-21	I_e	A	20				
	Operational power for AC-1, AC-7a and AC-21:							
	single-phase 230 V	P_e	kW	4.4				
	three-phase 230 V	P_e	kW	7.5				
	three-phase 400 V	P_e	kW	13				
	three-phase 500 V	P_e	kW	17.5				
	three-phase 690 V	P_e	kW	22				
	Maximum operating frequency for AC-1, AC-7a and AC-21		op. c./h	600				
	Electrical endurance for AC-1, AC-7a and AC-21		op. c.	200.000				
	Rated operational current for AC-3, AC-3e, AC-7b and AC-23 (at 400 V)	I_e	A	8.5	11.3	11.3	15.5 (11.3*)	15.5 (11.3*)
	Operational power for AC-3, AC-3e, AC-7b and AC-23:							
	single-phase 230 V	P_e	kW	0.75	1.1	1.1	1.1	1.1
	three-phase 230 V	P_e	kW	2	3	3	3.7 (3*)	3.7 (3*)
	three-phase 400 V	P_e	kW	4	5.5	5.5	7.5 (5.5*)	7.5 (5.5*)
	three-phase 500 V	P_e	kW	4	5.5	5.5	5.5	5.5
	three-phase 690 V	P_e	kW	4	5.5	5.5	5.5	5.5
	Maximum operating frequency for AC-3, AC-3e, AC-7b and AC-23		op. c./h	600				
	Electrical endurance for AC-3, AC-3e, AC-7b and AC-23		op. c.	1.000.000				
	Rated operational current for AC-4 (at 400 V)	I_e	A	/	5	5	5	5
	Operational power for AC-4:							
	three-phase 230 V	P_e	kW	/	0.75	0.75	0.75	0.75
	three-phase 400 V	P_e	kW	/	2.2	2.2	2.2	2.2
	three-phase 500 V	P_e	kW	/	1.5	1.5	1.5	1.5
	three-phase 690 V	P_e	kW	/	1.5	1.5	1.5	1.5
	Maximum operating frequency for AC-4		op. c./h	300				
	Electrical endurance for AC-4		op. c.	100.000				
	Rated motor power according to standards UL and CSA:							
	single-phase 115 V	P_e	HP	1/3	1/2	1/2	1/2	1/2
	single-phase 230 V	P_e	HP	3/4	1.5	1.5	1.5	1.5
	three-phase 230 V	P_e	HP	2	3	3	3	3
	three-phase 460 V	P_e	HP	3	5	5	5	5
	three-phase 575 V	P_e	HP	5	7.5	7.5	7.5	7.5

* It applies for AC-3e

K03M, K07M, K07MF, K07MX, K07MG, K07MGF, K07MGX, K08M, K08MG

	Type	Symbol	Unit	K03M	K07M K07MF K07MX	K07MG K07MGF K07MGX	K08MG	K08M
MAIN CIRCUIT	Switching of capacitors AC-6b and AC-7c (at 230 V)	C	µF	30				
	Maximum operating frequency for AC-6b and AC-7c		op. c./h	600				
	Electrical endurance for AC-6b and AC7c		op. c.	100.000				
	Terminal capacity:							
	rigid (solid and stranded)	S	mm^2	0.75 ... 2.5				
	flexible			0.5 ... 2.5				
	Length of removed wire insulation		mm	10				
	Screw			M3.5				
	Screw head			PZ2				
	Tightening torque		Nm	1.2				
AUXILIARY CIRCUIT	Power dissipation per pole		W	1.2				
	Maximum back-up fuse for short-circuit protection gL and gG: coordination type 2			20				
	Rated insulation voltage	U_i	V	690				
	Rated operational current for AC-15:							
	single-phase 230 V	I_e	A	6				
	single-phase 400 V			4				
	single-phase 500 V			2				
	single-phase 690 V			1				
	Maximum operating frequency for AC-15		op. c./h	1.200				
	Electrical endurance for AC-15		op. c.	1.000.000				
	Rated operational current for DC-13:							
	1 pole ... 24 V DC/110 V DC		A	4 / 0.25				
	Maximum operating frequency for DC-13		op. c./h	1.200				
	Terminal capacity:							
	rigid (solid and stranded)	S	mm^2	0.75 ... 2.5				
	flexible			0.5 ... 2.5				
	Length of removed wire insulation		mm	10				
	Screw			M3.5				
	Screw head			PZ2				
	Tightening torque		Nm	1.2				
COIL	Range of control voltage for switch-on	U_c	%	85 ... 110				
	Range of control voltage for drop out	U_c	%	20 ... 75		10 ... 75	10 ... 75	20 ... 75
	Kind of voltage			AC		DC	DC	AC
	Standard control voltages	U_c	V	1)	2)	3)	3)	2)
	Frequency of AC control voltage	f	Hz	50/60		/	/	50/60
	Control mode			remote control with U_c				
	Coil consumption:							
	switch-on		VA/W	39/34		/	/	39/34
	operation			8.1/4		3	3	8.1/4
	Delays:							
	make		ms	10 ... 15	10 ... 15	25 ... 30	25 ... 30	10 ... 15
	brake			6 ... 15	5 ... 10	10 ... 25	10 ... 25	5 ... 10
	Terminal capacity:							
	rigid (solid and stranded)		mm^2	0.75 ... 2.5				
	flexible			0.5 ... 2.5				
	Length of removed wire insulation		mm	10				
	Screw			M3.5				
	Screw head			PZ2				
	Tightening torque		Nm	1.2				
SAFETY	MTTF - Mean time to failure $MTTF = 1/\lambda = B10/(0.1\ n_{op})$	AC-1 AC-3	h	5.000 25.000				
	$MTTF_d$ - Mean time to failure dangerous $MTTFd = 1/\lambda_d = B10_d/(0.1\ n_{op})$	AC-1 AC-3	h	6.666 33.333				
	B10 - Number of operating cycles until 10 % of devices fail	AC-1 AC-3	op. c.	150.000 750.000				
	$B10_d$ - Number of operating cycles until 10 % of device dangerous $B10_d$ = B10/ratio of dangerous failures	AC-1 AC-3	op. c.	200.000 1.000.000				
	λ - Failure rate $\lambda = (0.1\ n_{op})/B10$	AC-1 AC-3	1/h	0.0002 0.00004				
	λ_d - Failure rate dangerous $\lambda_d = (0.1\ n_{op})/B10_d$	AC-1 AC-3	1/h	0.00015 0.00003				
	Ratio of dangerous failures		%	75				
	n_{op} - Operating cycles (operating cycles/h)		op. c./h	300				

1) 6,12,24,42,48,110/125,220/240,380/415,440/460,550 V **2)** 6,12,24,42,48,110/125,220/240,380/415,440/460,500,690 V **3)** 6,12,24,48,60,72,110,125,220,250 V

K03C, K07C, K07CF, K07CX, K07CG, K07CGF, K07CGX

	Type	Symbol	Unit	K03C	K07C K07CF K07CX	K07CG K07CGF K07CGX
GENERAL	Standards			IEC/EN 60947-5-1, UL 508		
	Approvals			CE, UL, CSA, EAC		
	Module width		mm	35	45	
	Number of poles			4		
	Degree of protection			IP20		
	Pollution degree			3		
	Climatic conditions			95 % relative humidity		
	Ambient temperature:					
	open		°C	-20 ... +60		
	closed			-20 ... +45		
	Storage temperature		°C	-30 ... +80		
	Maximum altitude U_i and U_e is reduced for 1.2 % and I_e for 0.4 % for every additional 100 m		m	2000		
	Number of contactors or switches side-by-side:					
	≤40 °C			no limitation		
	(40 ... 55) °C					
	Noise level (operation)		dB	30	30	20
	Maximum operating frequency with no load		op. c./h	3.000		
	Mechanical endurance		op. c.	10.000.000		
	Weight		g	160	170	215
MAIN CIRCUIT	Contact reliability			≥17 V; ≥50 mA		
	Maximum back-up fuse for short-circuit protection gL and gG:					
	coordination type 2		A	25		
	Rated insulation voltage	U_i	V	690		
	Rated impulse withstand voltage	U_{imp}	kV	6		
	Rated operational voltage	U_e	V	690		
	Rated frequency	f	Hz	50/60		
	Thermal current	I_{th}	A	20		
	Rated operational current for AC-1, AC-7a and AC-21	I_e	A	20		
	Rated operational current for AC-15:					
	single-phase 230 V	I_e	A	6		
	single-phase 400 V			4		
	single-phase 500 V			2		
	single-phase 690 V			1		
	Maximum operating frequency for AC-15		op. c./h	1.200		
	Electrical endurance for AC-15		op. c.	1.000.000		
	Rated operational current for DC-13:					
	1 pole ... 24 V DC/110 V DC		A	4 / 0.25		
	Maximum operating frequency for DC-13		op. c./h	1.200		
	Terminal capacity:					
	rigid (solid and stranded)	S	mm^2	0.75 ... 2.5		
	flexible			0.5 ... 2.5		
	Length of removed wire insulation		mm	10		
	Screw			M3.5		
	Screw head			PZ2		
	Tightening torque		Nm	1.2		
COIL	Range of control voltage for switch-on	U_c	%	85 ... 110		
	Range of control voltage for drop out	U_c	%	20 ... 75		10 ... 75
	Kind of voltage			AC		DC
	Standard control voltages	U_c	V	1)	2)	3)
	Frequency of AC control voltage	f	Hz	50/60		/
	Control mode			remote control with U_c		
	Coil consumption:					
	switch-on		VA/W	39/34		- / 3
	operation			8.1/4		- / 3
	Delays:					
	make		ms	10 ... 15	10 ... 15	25 ... 30
	brake			6 ... 15	5 ... 10	10 ... 25
	Terminal capacity:					
	rigid (solid and stranded)		mm^2	0.75 ... 2.5		
	flexible			0.5 ... 2.5		
	Length of removed wire insulation		mm	10		
	Screw			M3.5		
	Screw head			PZ2		
	Tightening torque		Nm	1.2		

1) 6,12,24,42,48,110/125,220/240,380/415,440/460,550 V **2)** 6,12,24,42,48,110/125,220/240,380/415,440/460,500,690 V **3)** 6,12,24,48,60,72,110,125,220,250 V

K03C, K07C, K07CF, K07CX, K07CG, K07CGF, K07CGX

	Type	Symbol	Unit	K03C	K07C K07CF K07CX	K07CG K07CGF K07CGX
SAFETY	MTTF - Mean time to failure MTTF = $1/\lambda$ = B10/(0.1 n_{op})	AC-15 DC-13	h		12.500 10.000	
	$MTTF_d$ - Mean time to failure dangerous MTTFd = $1/\lambda_d$ = $B10_d$/(0.1 n_{op})	AC-15 DC-13	h		16.666 13.333	
	B10 - Number of operating cycles until 10 % of devices fail	AC-15 DC-13	op. c.		750.000 600.000	
	$B10_d$ - Number of operating cycles until 10 % of device dangerous $B10_d$ = B10/ratio of dangerous failures	AC-15 DC-13	op. c.		1.000.000 800.000	
	λ - Failure rate λ = (0.1 n_{op})/B10	AC-15 DC-13	1/h		0.00008 0.0001	
	λ_d - Failure rate dangerous λ_d = (0.1 n_{op})/$B10_d$	AC-15 DC-13	1/h		0.00006 0.000075	
	Ratio of dangerous failures		%		75	
	n_{op} - Operating cycles (operating cycles/h)		op. c./h		600	

K03M, K07M, K07MF, K07MX, K07MG, K07MGF, K07MGX, K08M, K08MG

Electrical endurance

Diagram 1
Electrical endurance of contactor relays and auxiliary contacts of motor contactors

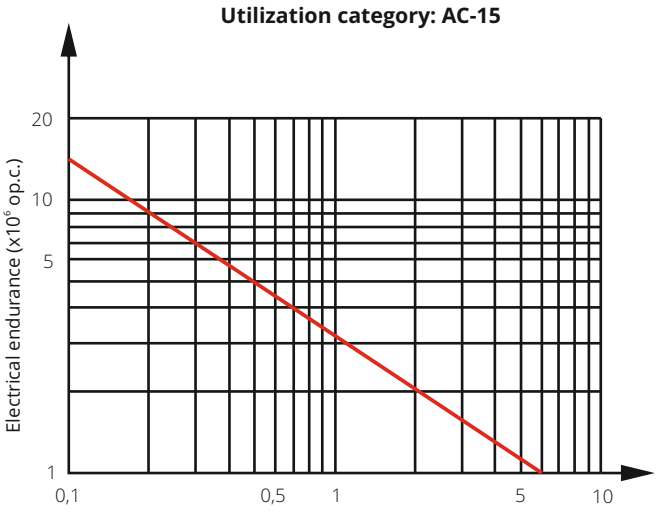

AC-15 Breaking current I_e (A) at 230 V
Operation frequency: 1200 op.c./h

Diagram 2
Electrical endurance of main contacts of motor contactors

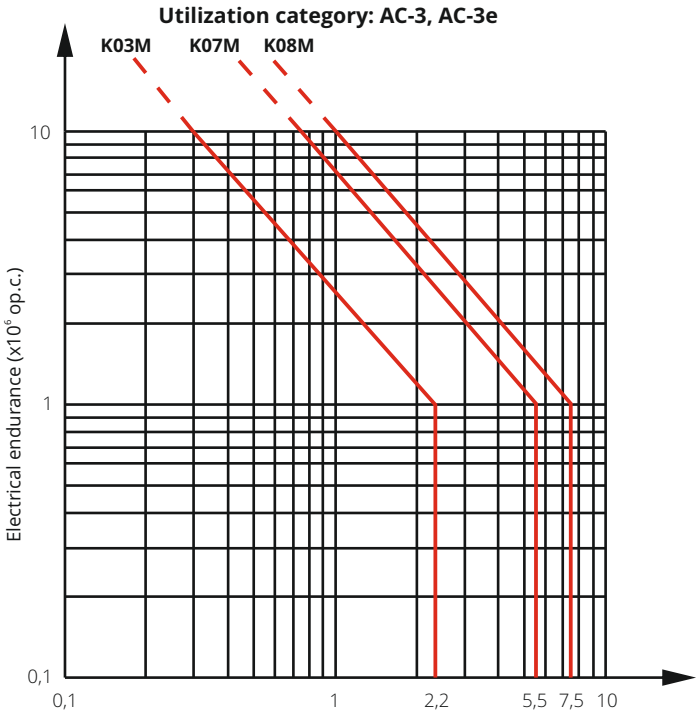

AC-3 Motor rated power (kW) at 400 V, 50 Hz
Operation frequency: 600 op.c./h

Mounting positions of accessories

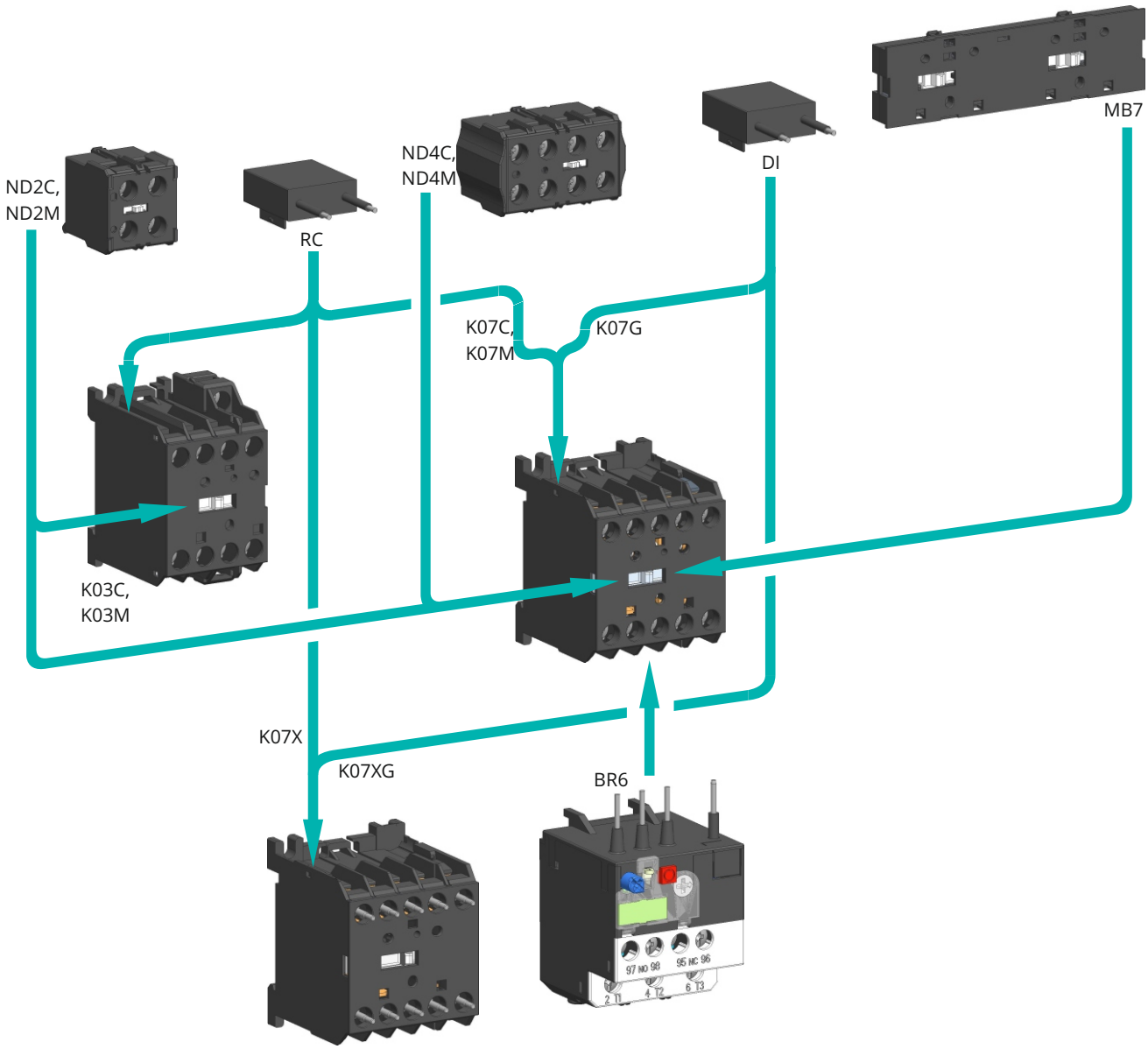

Snap-on auxiliary switch blocks

	Type	Symbol	Unit	ND2C ND2M	ND4C ND4M
GENERAL	Standards			IEC/EN 60947-5-1, VDE 0660, UL 508	
	Approvals			CE, UL, CSA	
	Module width			1	2
	Number of poles			2	4
	Degree of protection			IP20	
	Pollution degree			3	
	Maximum altitude U_i and U_e is reduced for 1.2 % and I_e for 0.4 % for every additional 100 m		m	2000	
	Maximum operating frequency with no load		op. c./h	3000	
	Mechanical endurance		op. c.	10.000.000	
	Weight		g	20	40
AUXILIARY CIRCUIT	Contact reliability			≥17 V; ≥50 mA	
	Maximum back-up fuse for short-circuit protection gL and gG: coordination type 2		A	20	
	Rated insulation voltage	U_i	V	690	
	Rated impulse withstand voltage	U_{imp}	kV	6	
	Rated operational voltage	U_e	V	690	
	Rated frequency	f	Hz	50 /60	
	Thermal current	I_{th}	A	20	
	Rated operational current for AC-15:				
	single-phase 230 V	I_e	A	6	
	single-phase 400 V			4	
	single-phase 500 V			2	
	single-phase 690 V			1	
	Maximum operating frequency for AC-15		op. c./h	1.200	
	Electrical endurance for AC-15		op. c.	500.000	
	Switching of auxiliary loads acc. to standard UL and CSA			A600, R300	
	Rated operational current for DC-13: 1 pole ... 24 V DC / 110 V DC		A	3 / 0.15	
	Maximum operating frequency for DC-13		op. c./h	1.200	
	Electrical endurance for DC-13		op. c.	500.000	
	Terminal capacity:				
	rigid (solid and stranded)	S	mm^2	0.75 ... 2.5	
	flexible			0.5 ... 2.5	
	Length of removed wire insulation		mm	10	
	Screw			M3.5	
	Screw head			PZ2	
	Tightening torque		Nm	1.2	

BR6 Thermal overload relay

	Type	Symbol	Unit	BR6
GENERAL	Standards			IEC 60947-4-1, IEC 60947-5-1, UL508
	Approvals			CE
	For use with			K07
	Degree of protection			IP20
	Ambient temperature			
	operating		°C	-25 ... +50
	storage			-25 ... +70
	Dimensions (WxHxD)		mm	44.8 x 70.6 x 50.6
	Operating position			vertical
	Reset type			auto, manual
	Maximum altitude above sea level		m	2000
	Weight		g	80
MAIN CIRCUIT	Rated insulation voltage	U_i	V	690
	Rated impulse withstand voltage	U_{imp}	kV	6
	Rated operational voltage	U_e	V	690
	Adjustable current	I_r	A	0.1 ... 14
	Rated frequency	f	Hz	0 ... 400
	Overvoltage category / pollution degree acc. to IEC/EN 60947-1			III / 3
	Trip class acc. to IEC/EN 60947-4-1			10
	Temperature compensation range		°C	-5 ... +40
	Sensitivity to phase failure			yes
	Power loss at I_n	P	W	6
	Terminal capacity		mm^2	0.75 ... 2.5
	Conductor insulation stripping length		mm	9
	Screw			M3.5
	Screw head			PZ2
	Tightening torque		Nm	1.2
AUXILIARY CIRCUITS	Rated insulation voltage	U_i	V	690
	Rated impulse withstand voltage	U_{imp}	kV	6
	Rated operational voltage	U_e	V	AC: 500 ; DC: 230
	Overvoltage category / pollution degree acc. to IEC/EN 60947-1			III / 3
	Thermal current (both contacts)	I_{th}	A	6
	Contact electrical rating			C600 / P600
	Rated operational current AC-15			
	220/240 V NO	I_e	A	0.5
	380/415 V NO	I_e	A	0.5
	500 V NO	I_e	A	0.3
	220/240 V NC	I_e	A	1.5
	380/415 V NC	I_e	A	0.7
	500 V NC	I_e	A	0.5
	Rated operational current DC-13			
	220/240 V both contacts	I_e	A	1.5
	380/415 V both contacts	I_e	A	0.7
	500 V both contacts	I_e	A	0.5
	Terminal capacity		mm^2	0.75 ... 2.5
	Conductor insulation stripping length		mm	9
	Screw			M3.5
	Screw head			PZ2
	Tightening torque		Nm	1

Setting ranges and maximum permitted back-up fuses

Seting range (A)	Max. back-up fuse gL/gG – for coordination 1 (A)	Max. back-up fuse gL/gG – for coordination 2 (A)
0.11 - 0.16	20	0.5
0.16 - 0.25	20	1
0.25 - 0.4	20	2
0.4 - 0.6	20	2
0.6 - 0.9	20	4
0.9 - 1.3	20	4
1.3 - 1.9	20	6
1.9- 2.8	20	6
2.8 - 4	20	10
4 - 6	20	10
6 - 9	20	16
8 - 11	25	20
11 - 14	35	25
13 - 15.5	35	25

Tripping curve BR6

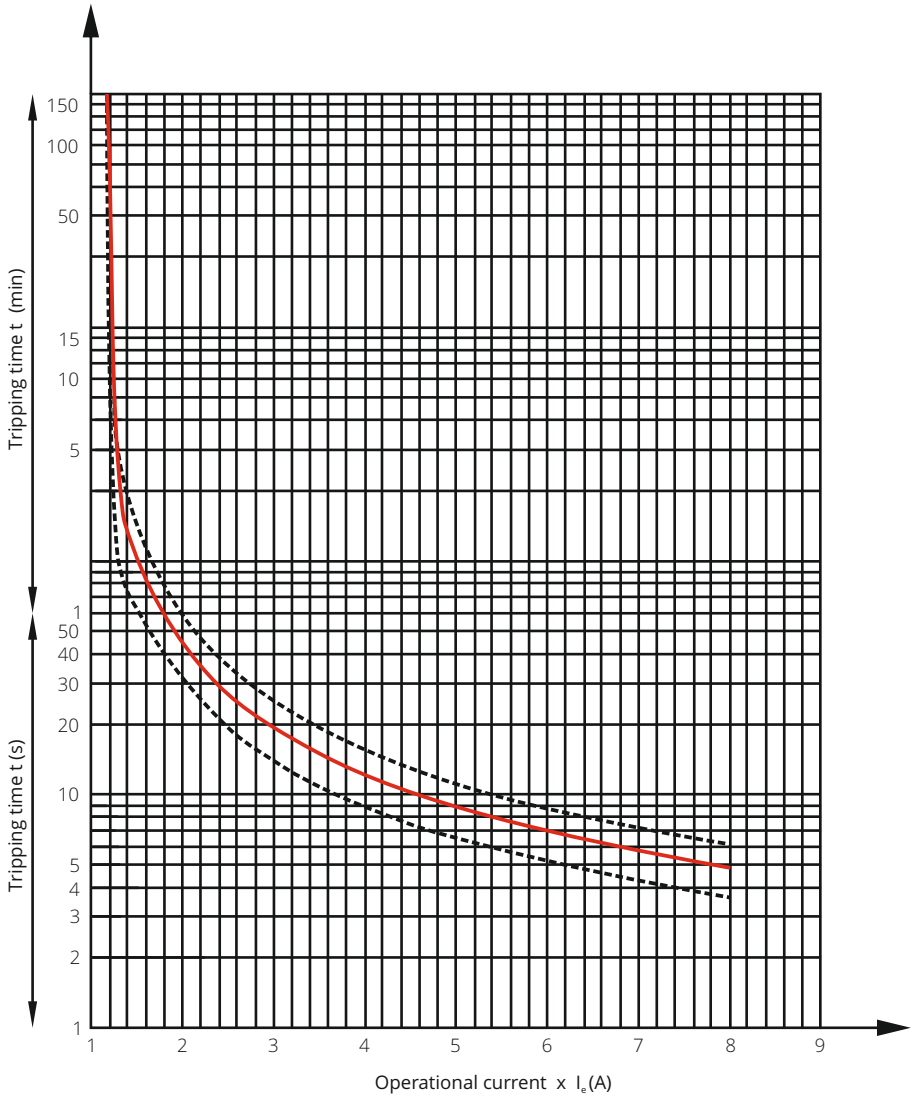

K03C, K03M, K03MX

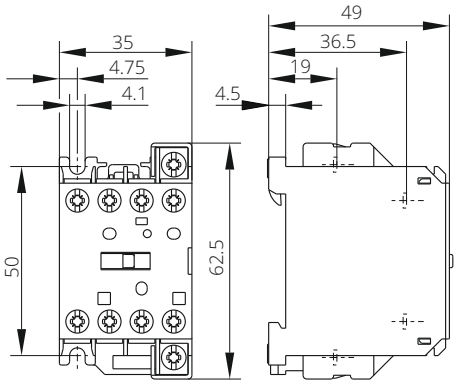

K07C, K07M, K08M, K07CG, K07MG, K08MG

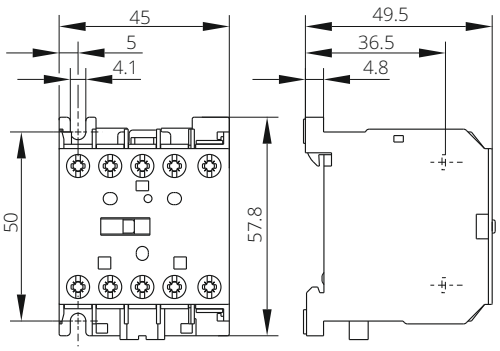

K07CX, K07CGX, K07MX, K07MGX

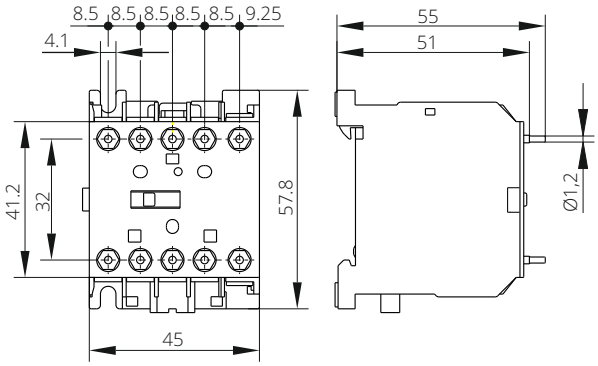

K07CF, K07MF, K07MGF, K07CGF

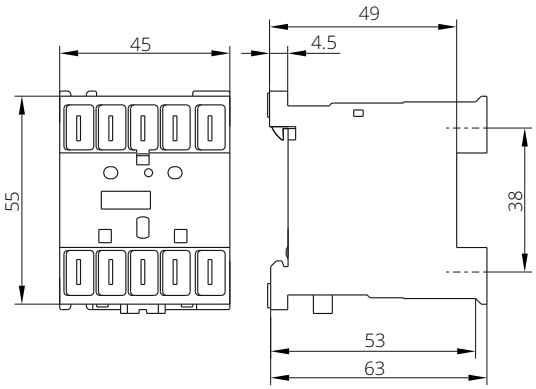

ND2

Two pole snap-on auxiliary switch blocks

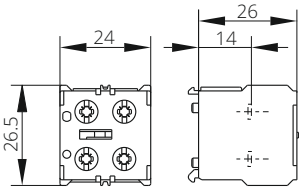

ND4

Four pole snap-on auxiliary switch blocks

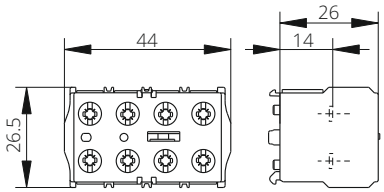

RC, DI suppressor

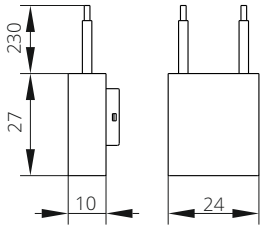

MB7

Mechanical interlock

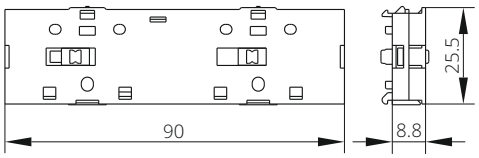

BR6
Thermal overload relay

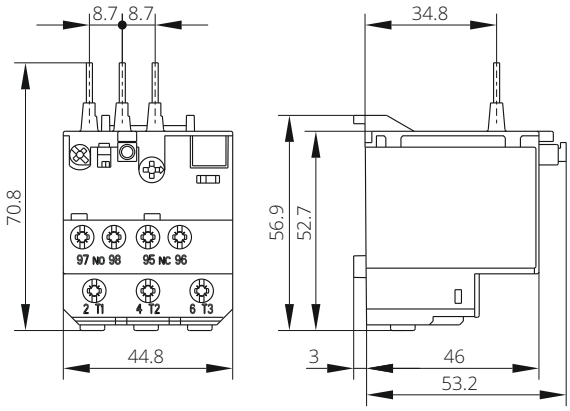

BR6 + K07x
BR6 + K08x

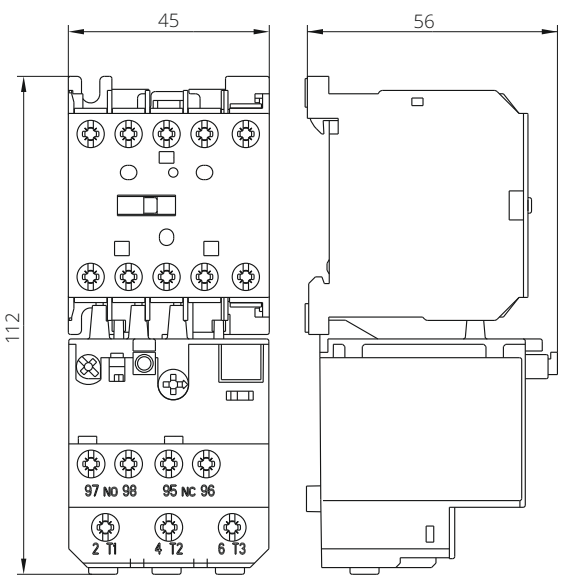

K03x + ND2

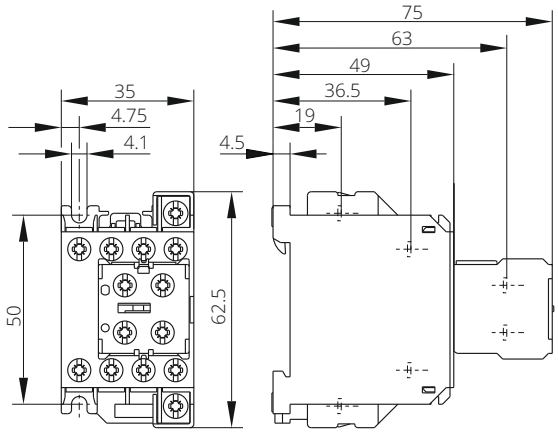

K07x + ND4
K08x + ND4

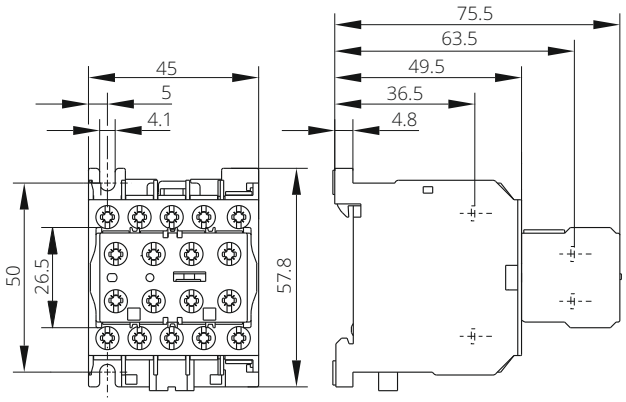

K07x + MB7 + LB7
K08x + MB7 + LB7

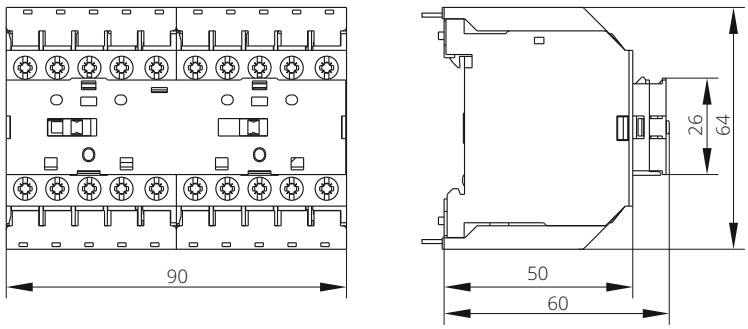

CONTACTORS ARE ELECTRICALLY REMOTE CONTROLLED SWITCHES USED FOR SWITCHING A POWER CIRCUIT. THOSE CONTACTORS ARE MAINLY USED FOR SWITCHING ELECTRIC MOTORS AND OTHER RESISTIVE, INDUCTIVE AND CAPACITIVE LOADS. .

FOR UNIVERSAL SWITCHING:

- All kind of motors
- Electric heating
- Lights and lightning
- Capacitor
- Other eletrical loads

ADVANCED OPERATION:

- Control combinations

OTHER BENEFITS:

- High contact reliabillity at low voltages
- High electrical and mechanical endurance and high switching capacity
- Wide range of control voltages is avalible

ORDERING DATA

Contactors KNL6 - KNL38 ..... page 1-20
DC contactors KNL6G - KNL38G ..... page 1-25
Accessories for contactors KNL6 - KNL38 ..... page 1-40

Example for Ordering data ..... page 1-27
Technical characteristics ..... page 1-28
Dimensions ..... page 1-43

CONTACTOR RELAY

AC-15 acc. to IEC/EN 60947-5-1 (4-pole, 45 mm widths)

AC

Type	Rated current I_e	Control voltage 50/60 Hz	Wiring diagram	Ordering No.	Weight (g)	Packaging (pcs)
KNL6-22 Q7	4 A	380/415 V	A1 13 21 31 43	30.050.631	300	10
KNL6-22 M7	4 A	220/240 V		30.050.486	300	10
KNL6-22 B7	4 A	24 V	A2 14 22 32 44	30.050.619	300	10
KNL6-22ü Q7	4 A	380/415 V	A1 13 21 31 43	30.051.046	300	10
KNL6-22ü M7	4 A	220/240 V		30.051.037	300	10
KNL6-22ü B7	4 A	24 V	A2 14 22 32 44	30.051.047	300	10
KNL6-31 Q7	4 A	380/415 V	A1 13 21 33 43	30.050.632	300	10
KNL6-31 M7	4 A	220/240 V		30.050.469	300	10
KNL6-31 B7	4 A	24 V	A2 14 22 34 44	30.050.620	300	10
KNL6-40 Q7	4 A	380/415 V	A1 13 23 33 43	30.050.700	300	10
KNL6-40 M7	4 A	220/240 V		30.050.468	300	10
KNL6-40 B7	4 A	24 V	A2 14 24 34 44	30.050.621	300	10

MOTOR CONTACTORS

AC-3 acc. to IEC/EN 60947-4-1 (4-pole, 45 mm widths)

AC

Type	Rated current I_e	Control voltage 50/60 Hz	Wiring diagram	Ordering No.	Weight (g)	Packaging (pcs)
KNL9-01 Q7	9 A	380/415 V	A1 1 3 5 21	30.050.639	300	10
KNL9-01 M7	9 A	220/240 V		30.050.475	300	10
KNL9-01 B7	9 A	24 V	A2 2 4 6 22	30.050.615	300	10
KNL9-10 Q7	9 A	380/415 V	A1 1 3 5 13	30.050.640	300	10
KNL9-10 M7	9 A	220/240 V		30.050.474	300	10
KNL9-10 B7	9 A	24 V	A2 2 4 6 14	30.050.616	300	10
KNL9-10/Sp4 Q7	9 A	380/415 V	A1 1 3 5 7	30.051.048	300	10
KNL9-10/Sp4 M7	9 A	220/240 V		30.050.736	300	10
KNL9-10/Sp4 B7	9 A	24 V	A2 2 4 6 8	30.051.049	300	10
KNL9-01/Sp4 Q7	9 A	380/415 V	A1 1 3 5 R7	30.051.050	300	10
KNL9-01/Sp4 M7	9 A	220/240 V		30.051.051	300	10
KNL9-01/Sp4 B7	9 A	24 V	A2 2 4 6 R8	30.051.052	300	10
KNL9-22/Sp4 Q7	10 A	380/415 V	A1 1 R3 R5 7	30.051.053	300	10
KNL9-22/Sp4 M7	10 A	220/240 V		30.050.864	300	10
KNL9-22/Sp4 B7	10 A	24 V	A2 2 R4 R6 8	30.051.054	300	10
KNL9-13/Sp4 Q7	9 A	380/415 V	A1 R1 R3 R5 7	30.051.055	300	10
KNL9-13/Sp4 M7	9 A	220/240 V		30.051.056	300	10
KNL9-13/Sp4 B7	9 A	24 V	A2 R2 R4 R6 8	30.051.057	300	10
KNL9-04/Sp4 Q7	9 A	380/415 V	A1 R1 R3 R5 R7	30.051.058	300	10
KNL9-04/Sp4 M7	9 A	220/240 V		30.051.041	300	10
KNL9-04/Sp4 B7	9 A	24 V	A2 R2 R4 R6 R8	30.051.059	300	10

TAGS IN TITLE:

ü - version with early and late contacts
Sp4 - version with all four main contacts

MOTOR CONTACTORS

AC-3 acc. to IEC/EN 60947-4-1 (4-pole, 45 mm widths)

AC

Type	Rated current I_e	Control voltage 50/60 Hz	Wiring diagram	Ordering No.	Weight (g)	Packaging (pcs)
KNL12-01 Q7	12 A	380/415 V	A1 1 3 5 21	30.050.657	300	10
KNL12-01 M7	12 A	220/240 V		30.050.656	300	10
KNL12-01 B7	12 A	24 V	A2 2 4 6 22	30.050.648	300	10
KNL12-10 Q7	12 A	380/415 V	A1 1 3 5 13	30.050.658	300	10
KNL12-10 M7	12 A	220/240 V		30.050.488	300	10
KNL12-10 B7	12 A	24 V	A2 2 4 6 14	30.050.649	300	10
KNL12-10/Sp4 Q7	12 A	380/415 V	A1 1 3 5 7	30.051.060	300	10
KNL12-10/Sp4 M7	12 A	220/240 V		30.050.735	300	10
KNL12-10/Sp4 B7	12 A	24 V	A2 2 4 6 8	30.051.061	300	10
KNL12-01/Sp4 Q7	12 A	380/415 V	A1 1 3 5 R7	30.051.062	300	10
KNL12-01/Sp4 M7	12 A	220/240 V		30.051.063	300	10
KNL12-01/Sp4 B7	12 A	24 V	A2 2 4 6 R8	30.051.064	300	10
KNL12-22/Sp4 Q7	12 A	380/415 V	A1 1 R3 R5 7	30.051.065	300	10
KNL12-22/Sp4 M7	12 A	220/240 V		30.050.039	300	10
KNL12-22/Sp4 B7	12 A	24 V	A2 2 R4 R6 8	30.051.066	300	10
KNL12-13/Sp4 Q7	12 A	380/415 V	A1 R1 R3 R5 7	30.051.067	300	10
KNL12-13/Sp4 M7	12 A	220/240 V		30.051.068	300	10
KNL12-13/Sp4 B7	12 A	24 V	A2 R2 R4 R6 8	30.051.069	300	10
KNL12-04/Sp4 Q7	12 A	380/415 V	A1 R1 R3 R5 R7	30.051.070	300	10
KNL12-04/Sp4 M7	12 A	220/240 V		30.051.071	300	10
KNL12-04/Sp4 B7	12 A	24 V	A2 R2 R4 R6 R8	30.051.072	300	10

AC-3 acc. to IEC/EN 60947-4-1 (4-pole, 45 mm widths)

AC

Type	Rated current I_e	Control voltage 50/60 Hz	Wiring diagram	Ordering No.	Weight (g)	Packaging (pcs)
KNL16-01 Q7	16 A	380/415 V	A1 1 3 5 21	30.050.674	300	10
KNL16-01 M7	16 A	220/240 V		30.050.673	300	10
KNL16-01 B7	16 A	24 V	A2 2 4 6 22	30.050.665	300	10
KNL16-10 Q7	16 A	380/415 V	A1 1 3 5 13	30.050.675	300	10
KNL16-10 M7	16 A	220/240 V		30.050.489	300	10
KNL16-10 B7	16 A	24 V	A2 2 4 6 14	30.050.666	300	10
KNL16-10/Sp4 Q7	16 A	380/415 V	A1 1 3 5 7	30.050.999	300	10
KNL16-10/Sp4 M7	16 A	220/240 V		30.050.807	300	10
KNL16-10/Sp4 B7	16 A	24 V	A2 2 4 6 8	30.051.073	300	10
KNL16-01/Sp4 Q7	16 A	380/415 V	A1 1 3 5 R7	30.051.074	300	10
KNL16-01/Sp4 M7	16 A	220/240 V		30.050.930	300	10
KNL16-01/Sp4 B7	16 A	24 V	A2 2 4 6 R8	30.051.075	300	10
KNL16-22/Sp4 Q7	17 A	380/415 V	A1 1 R3 R5 7	30.051.076	300	10
KNL16-22/Sp4 M7	17 A	220/240 V		30.050.860	300	10
KNL16-22/Sp4 B7	17 A	24 V	A2 2 R4 R6 8	30.051.077	300	10
KNL16-13/Sp4 Q7	16 A	380/415 V	A1 R1 R3 R5 7	30.051.078	300	10
KNL16-13/Sp4 M7	16 A	220/240 V		30.050.975	300	10
KNL16-13/Sp4 B7	16 A	24 V	A2 R2 R4 R6 8	30.051.079	300	10
KNL16-04/Sp4 Q7	16 A	380/415 V	A1 R1 R3 R5 R7	30.051.080	300	10
KNL16-04/Sp4 M7	16 A	220/240 V		30.050.834	300	10
KNL16-04/Sp4 B7	16 A	24 V	A2 R2 R4 R6 R8	30.051.081	300	10
KNL16-10/St4 Q7	16 A	380/415 V	A1 1 3 5 7	30.051.082	300	10
KNL16-10/St4 M7	16 A	220/240 V		30.050.984	300	10
KNL16-10/St4 B7	16 A	24 V	A2 2 4 6 8	30.051.083	300	10
KNL16-01/St4 Q7	16 A	380/415 V	A1 1 3 5 R7	30.051.084	300	10
KNL16-01/St4 M7	16 A	220/240 V		30.050.985	300	10
KNL16-01/St4 B7	16 A	24 V	A2 2 4 6 R8	30.051.085	300	10

TAGS IN TITLE:

Sp4 - version with all four main contacts
St4 - contactor for switching of capacitor banks

MOTOR CONTACTORS

AC-3 acc. to IEC/EN 60947-4-1 (4-pole, 45 mm widths)

AC

Type	Rated current I_e	Control voltage 50/60 Hz	Wiring diagram	Ordering No.	Weight (g)	Packaging (pcs)
KNL18-01 Q7	18 A	380/415 V	A1 1 3 5 21	30.050.838	300	10
KNL18-01 M7	18 A	220/240 V		30.050.836	300	10
KNL18-01 B7	18 A	24 V	A2 2 4 6 22	30.050.925	300	10
KNL18-10 Q7	18 A	380/415 V	A1 1 3 5 13	30.050.837	300	10
KNL18-10 M7	18 A	220/240 V		30.050.835	300	10
KNL18-10 B7	18 A	24 V	A2 2 4 6 14	30.050.924	300	10
KNL18-10/Sp4 Q7	18 A	380/415 V	A1 1 3 5 7	30.050.910	300	10
KNL18-10/Sp4 M7	18 A	220/240 V		30.050.908	300	10
KNL18-10/Sp4 B7	18 A	24 V	A2 2 4 6 8	30.051.086	300	10
KNL18-01/Sp4 Q7	18 A	380/415 V	A1 1 3 5 R7	30.051.087	300	10
KNL18-01/Sp4 M7	18 A	220/240 V		30.051.088	300	10
KNL18-01/Sp4 B7	18 A	24 V	A2 2 4 6 R8	30.051.089	300	10
KNL18-22/Sp4 Q7	17 A	380/415 V	A1 1 R3 R5 7	30.051.090	300	10
KNL18-22/Sp4 M7	17 A	220/240 V		30.051.091	300	10
KNL18-22/Sp4 B7	17 A	24 V	A2 2 R4 R6 8	30.051.092	300	10
KNL18-13/Sp4 Q7	18 A	380/415 V	A1 R1 R3 R5 7	30.051.093	300	10
KNL18-13/Sp4 M7	18 A	220/240 V		30.051.094	300	10
KNL18-13/Sp4 B7	18 A	24 V	A2 R2 R4 R6 8	30.051.095	300	10
KNL18-04/Sp4 Q7	18 A	380/415 V	A1 R1 R3 R5 R7	30.051.096	300	10
KNL18-04/Sp4 M7	18 A	220/240 V		30.051.097	300	10
KNL18-04/Sp4 B7	18 A	24 V	A2 R2 R4 R6 R8	30.051.098	300	10

TAGS IN TITLE: **Sp4** - version with all four main contacts

AC-3 acc. to IEC/EN 60947-4-1 (3-pole, 45 mm widths)

AC

Type	Rated current I_e	Control voltage 50/60 Hz	Wiring diagram	Ordering No.	Weight (g)	Packaging (pcs)
KNL22-00 Q7	22 A	380/415 V	A1 1 3 5	30.050.686	320	10
KNL22-00 M7	22 A	220/240 V		30.050.470	320	10
KNL22-00 B7	22 A	24 V	A2 2 4 6	30.050.609	320	10

AC-3 acc. to IEC/EN 60947-4-1 (3-pole, 45 mm widths)

AC

Type	Rated current I_e	Control voltage 50/60 Hz	Wiring diagram	Ordering No.	Weight (g)	Packaging (pcs)
KNL30-00 Q7	30 A	380/415 V	A1 1 3 5	30.050.694	320	10
KNL30-00 M7	30 A	220/240 V		30.050.471	320	10
KNL30-00 B7	30 A	24 V	A2 2 4 6	30.050.690	320	10

AC-3 acc. to IEC/EN 60947-4-1 (3-pole, 45 mm widths)

AC

Type	Rated current I_e	Control voltage 50/60 Hz	Wiring diagram	Ordering No.	Weight (g)	Packaging (pcs)
KNL38-00 Q7	38 A	380/415 V	A1 1 3 5	30.051.099	320	10
KNL38-00 M7	38 A	220/240 V		30.051.100	320	10
KNL38-00 B7	38 A	24 V	A2 2 4 6	30.051.101	320	10

NOTE: All versions KNL6(G)-KNL38(G) can be cabled with one (F1) or two (F2) pol faston interface.
The limit when we use faston connection to the main circuit I_{thmax} = 25 A and I_{emax} = 25 A.

SNAP-ON AUXILIARY SWITCH BLOCKS

AC-15 acc. to IEC/EN 60947-5-1 (4-pole)

Type	Rated current I_e	Wiring diagram	Ordering No.	Weight (g)	Packaging (pcs)
NDL1 (for KNL6)	6 A	-11	38.422.827	66	10
		-02	38.422.828		
		-20	38.422.826		
		-22	38.422.850		
		-31	38.422.940		
		-13	38.422.939		
		-40	38.422.864		
		-04	38.422.976		
NDL2 (for KNL9, KNL12, KNL16, KNL18)	6 A	-11	38.423.834	66	10
		-02	38.422.835		
		-20	38.423.457		
		-22	38.422.779		
		-31	38.422.754		
		-13	38.422.941		
		-40	38.422.780		
		-04	38.422.781		
NDL3 (for KNL22, KNL30, KNL38)	6 A	-11	38.422.836	66	10
		-02	38.423.014		
		-20	38.423.470		
		-22	38.422.943		
		-31	38.422.851		
		-13	38.422.942		
		-40	38.423.390		
		-04	38.423.374		

AUXILIARY SWITCH BLOCKS

AC-15 acc. to IEC/EN 60947-5-1 (single pole for side mounting)

Type	Rated current I_e	Version	Ordering No.	Weight (g)	Packaging (pcs)
NPL1 (for KNL9-KNL18)	6 A	-10	38.422.751	18	1
NPL1 (for KNL9-KNL18)		-01	38.422.752		
NPL2 (for KNL22-KNL38)		-10	38.422.852		
NPL2 (for KNL22-KNL38)		-01	38.422.945		

RC suppressor (for KNL6 - KNL38)

Type	Control voltage U_c	Wiring diagram	Ordering No.	Weight (g)	Packaging (pcs)
RC1-KNL	12 - 48 V	R C	30.017.074	16	10
RC2-KNL	48 - 250 V		30.017.075	16	10
RC3-KNL	250 - 380 V		30.017.076	16	10
RC4-KNL	380 - 600 V		30.017.077	16	10

Meachanical interlock (for KNL6 - KNL38)

Type	Ordering No.	Weight (g)	Packaging (pcs)
MBL	38.422.853	14	10

Distance spacer

Type	Ordering No.	Weight (g)	Packaging (pcs)
DZ	37.421.996	2	10

Identification plate

Type	Ordering No.	Weight (g)	Packaging (pcs)
NT	37.425.330	1	10

Spare parts: AC coils (50/60 Hz) for KNL6 - KNL38

Type	Ordering No.	Weight (g)	Packaging (pcs)
24	38.502.343	60	1
42	38.502.346	60	1
48	38.502.347	60	1
110/125	38.502.348	60	1
220/240	38.502.272	60	1
380/415	38.502.349	60	1
440/460	38.502.585	60	1
480/520	38.502.470	60	1

Rigid connecting kits

Type	Discription	Ordering No.	Weight (g)	Packaging (pcs)
WK 2.1	For reversing switch, suitable for contactors: 4-9 kW (for contactors KNL9-KNL18) (max. current 32 A), 4 terminals in line (3 main terminals, 1 auxiliary terminal)	655200014000	40	1
WK 2.2	For star-delta starters, suitable for contactors: 4-9 kW (for contactors KNL9-KNL18) (max. current 32 A), 4 terminals in line (3 main terminals, 1 auxiliary terminal)	655200018000	50	
WK 4.1	For reversing switch, suitable for contactors: 11 and 18.5 kW (for contactors KNL22-KNL38) (max. current 40 A), 3 terminals in line (3 main terminals)	655200015000	50	
WK 4.2	For star-delta starters, suitable for contactors: 11 and 18.5 kW (for contactors KNL22, KNL38) (max. current 40 A), 3 terminals in line (3 main terminals)	655200019000	60	
WK 5.1	For reversing switch with mechanical interlock, suitable for contactors: 4-9 kW (for contactors KNL9-KNL18) (max. current 32 A), 4 terminals in line (3 main terminals, 1 auxiliary terminal)	655200016000	30	

WK 2.1

BR 16 THERMAL OVERLOAD RELAY

up to 20 A for KNL9 - KNL18 contactors

Type	Setting range (A)	Max. backup fuse for Coordination 1 (A)	Ordering No.	Weight (g)	Packaging (pcs)
BR16-0.16	0.1 ... 0.16	1	786.050.481	115	1
BR16-0.25	0.16 ... 0.25	1	786.050.482		
BR16-0.4	0.25 ... 0.4	1	786.050.483		
BR16-0.5	0.35 ... 0.5	1	786.050.484		
BR16-0.63	0.45 ... 0.63	1	786.050.485		
BR16-0.8	0.55 ... 0.8	3	786.050.486		
BR16-1	0.75 ... 1	3	786.050.487		
BR16-1.3	0.9 ... 1.3	3	786.050.488		
BR16-1.6	1.1 ... 1.6	3	786.050.489		
BR16-2	1.4 ... 2	6	786.050.490		
BR16-2.5	1.8 ... 2.5	6	786.050.491		
BR16-3.2	2.3 ... 3.2	6	786.050.492		
BR16-4	2.9 ... 4	10	786.050.493		
BR16-4.8	3.5 ... 4.8	10	786.050.494		
BR16-6.3	4.5 ... 6.3	15	786.050.495		
BR16-7.5	5.5 ... 7.5	15	786.050.496		
BR16-10	7.2 ... 10	25	786.050.497		
BR16-12.5	9 ... 12.5	30	786.050.498		
BR16-16	11.3 ... 16	40	786.050.499		
BR16-20	15 ... 20	50	786.050.500		

BR 30 THERMAL OVERLOAD RELAY

up to 38 A for KNL22 - KNL38 contactors

Type	Setting range (A)	Max. backup fuse for Coordination 1 (A)	Ordering No.	Weight (g)	Packaging (pcs)
BR30-21.5	17.5 ... 21.5	50	786.050.501	115	1
BR30-25	21 ... 25	60	786.050.502		
BR30-30	24.5 ... 30	70	786.050.503		
BR30-36	29 ... 36	60	786.050.532		
BR30-38	33 ... 38	70	786.050.533		

CONNECTION MODULE

for BR16 and BR 30 thermal overload relays

Type	Thermal current (A)	Ordering No.	Weight (g)	Packaging (pcs)
RP16	40	38.422.749	50	1

CONTACTOR RELAYS

AC-15 acc. to IEC/EN 60947-5-1 (3-pole, 45 mm widths)

DC

Type	Rated current I_e	Control voltage	Wiring diagram	Ordering No.	Weight (g)	Packaging (pcs)
KNL6G-30 MD	4 A	220 V	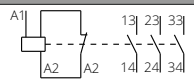	30.052.520	300	10
KNL6G-30 ED	4 A	110 V		30.052.521	300	10
KNL6G-30 BD	4 A	24 V		30.052.522	300	10
KNL6G-03 MD	4 A	220 V	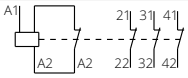	30.052.523	300	10
KNL6G-03 ED	4 A	110 V		30.052.524	300	10
KNL6G-03 BD	4 A	24 V		30.052.525	300	10
KNL6G-21 MD	4 A	220 V	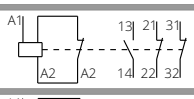	30.052.526	300	10
KNL6G-21 ED	4 A	110 V		30.052.527	300	10
KNL6G-21 BD	4 A	24 V		30.052.528	300	10
KNL6G-12 MD	4 A	220 V	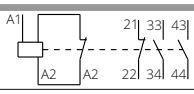	30.052.529	300	10
KNL6G-12 ED	4 A	110 V		30.052.530	300	10
KNL6G-12 BD	4 A	24 V		30.052.531	300	10

MOTOR CONTACTORS

AC-3 acc. to IEC/EN 60947-4-1 (3-pole, 45 mm widths)

DC

Type	Rated current I_e	Control voltage	Wiring diagram	Ordering No.	Weight (g)	Packaging (pcs)
KNL9G-00 MD	9 A	220 V	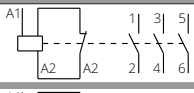	30.052.532	300	10
KNL9G-00 ED	9 A	110 V		30.052.533	300	10
KNL9G-00 BD	9 A	24 V		30.052.534	300	10
KNL12G-00 MD	12 A	220 V	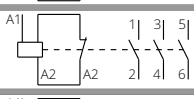	30.052.535	300	10
KNL12G-00 ED	12 A	110 V		30.052.536	300	10
KNL12G-00 BD	12 A	24 V		30.052.537	300	10
KNL16G-00 MD	16 A	220 V	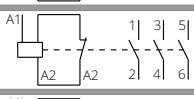	30.052.538	300	10
KNL16G-00 ED	16 A	110 V		30.052.539	300	10
KNL16G-00 BD	16 A	24 V		30.052.540	300	10
KNL18G-00 MD	18 A	220 V	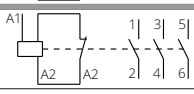	30.052.541	300	10
KNL18G-00 ED	18 A	110 V		30.052.542	300	10
KNL18G-00 BD	18 A	24 V		30.052.543	300	10

AC-3 acc. to IEC/EN 60947-4-1 (3-pole, 45 mm widths)

DC

Type	Rated current I_e	Control voltage	Wiring diagram	Ordering No.	Weight (g)	Packaging (pcs)
KNL22G-00 + NDLG-03 MD	22 A	220 V	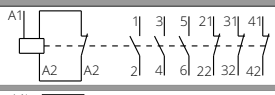	30.052.230	340	10
KNL22G-00 + NDLG-03 ED	22 A	48 V		30.052.465	340	10
KNL22G-00 + NDLG-03 BD	22 A	24 V		30.052.228	340	10
KNL22G-00 + NDLG-30 MD	22 A	220 V	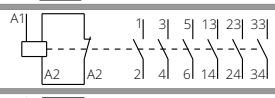	30.052.222	340	10
KNL22G-00 + NDLG-30 ED	22 A	48 V		30.052.468	340	10
KNL22G-00 + NDLG-30 BD	22 A	24 V		30.052.220	340	10
KNL22G-00 + NDLG-21 MD	22 A	220 V	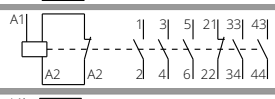	30.052.257	340	10
KNL22G-00 + NDLG-21 ED	22 A	48 V		30.052.470	340	10
KNL22G-00 + NDLG-21 BD	22 A	24 V		30.052.106	340	10
KNL22G-00 + NDLG-12 MD	22 A	220 V	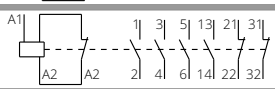	30.052.227	340	10
KNL22G-00 + NDLG-12 ED	22 A	48 V		30.052.472	340	10
KNL22G-00 + NDLG-12 BD	22 A	24 V		30.052.225	340	10
KNL22G-00 + NDLG-10 MD	22 A	220 V	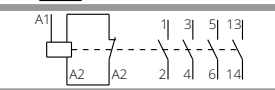	30.052.474	340	10
KNL22G-00 + NDLG-10 ED	22 A	48 V		30.052.475	340	10
KNL22G-00 + NDLG-10 BD	22 A	24 V		30.052.476	340	10
KNL22G-00 + NDLG-01 MD	22 A	220 V	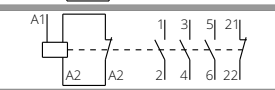	30.052.477	340	10
KNL22G-00 + NDLG-01 ED	22 A	48 V		30.052.478	340	10
KNL22G-00 + NDLG-01 BD	22 A	24 V		30.052.479	340	10
KNL22G-00 + NPLG [1] MD	22 A	220 V	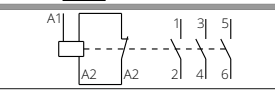	30.052.073	310	10
KNL22G-00 + NPLG [1] ED	22 A	48 V		30.052.480	310	10
KNL22G-00 + NPLG [1] BD	22 A	24 V		30.052.143	310	10

[1] 57 mm widths

MOTOR CONTACTORS

AC-3 acc. to IEC/EN 60947-4-1 (3-pole, 45 mm widths)

DC

Type	Rated current I_e	Control voltage	Wiring diagram	Ordering No.	Weight (g)	Packaging (pcs)
KNL30G-00 + NDLG-03 MD	30 A	220 V	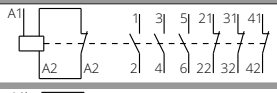	30.052.097	340	10
KNL30G-00 + NDLG-03 ED	30 A	48 V		30.052.481	340	10
KNL30G-00 + NDLG-03 BD	30 A	24 V		30.052.236	340	10
KNL30G-00 + NDLG-30 MD	30 A	220 V	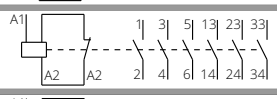	30.052.033	340	10
KNL30G-00 + NDLG-30 ED	30 A	48 V		30.052.483	340	10
KNL30G-00 + NDLG-30 BD	30 A	24 V		30.052.231	340	10
KNL30G-00 + NDLG-21 MD	30 A	220 V	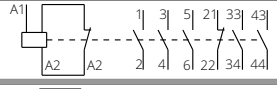	30.052.095	340	10
KNL30G-00 + NDLG-21 ED	30 A	48 V		30.052.484	340	10
KNL30G-00 + NDLG-21 BD	30 A	24 V		30.052.119	340	10
KNL30G-00 + NDLG-12 MD	30 A	220 V	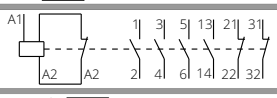	30.052.096	340	10
KNL30G-00 + NDLG-12 ED	30 A	48 V		30.052.485	340	10
KNL30G-00 + NDLG-12 BD	30 A	24 V		30.052.258	340	10
KNL30G-00 + NDLG-10 MD	30 A	220 V	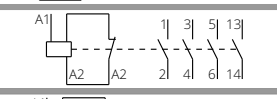	30.052.486	340	10
KNL30G-00 + NDLG-10 ED	30 A	48 V		30.052.487	340	10
KNL30G-00 + NDLG-10 BD	30 A	24 V		30.052.488	340	10
KNL30G-00 + NDLG-01 MD	30 A	220 V	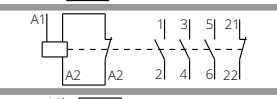	30.052.489	340	10
KNL30G-00 + NDLG-01 ED	30 A	48 V		30.052.490	340	10
KNL30G-00 + NDLG-01 BD	30 A	24 V		30.052.491	340	10
KNL30G-00 + NPLG [1] MD	30 A	220 V	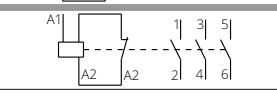	30.052.028	310	10
KNL30G-00 + NPLG [1] ED	30 A	48 V		30.052.492	310	10
KNL30G-00 + NPLG [1] BD	30 A	24 V		30.052.169	310	10

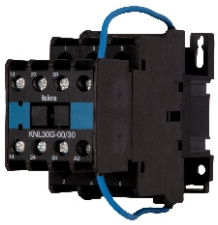

AC-3 acc. to IEC/EN 60947-4-1 (3-pole, 45 mm widths)

DC

Type	Rated current I_e	Control voltage	Wiring diagram	Ordering No.	Weight (g)	Packaging (pcs)
KNL38G-00 + NDLG-03 MD	38 A	220 V	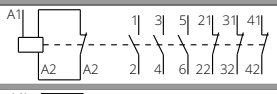	30.052.493	340	10
KNL38G-00 + NDLG-03 ED	38 A	48 V		30.052.494	340	10
KNL38G-00 + NDLG-03 BD	38 A	24 V		30.052.495	340	10
KNL38G-00 + NDLG-30 MD	38 A	220 V	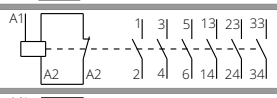	30.052.496	340	10
KNL38G-00 + NDLG-30 ED	38 A	48 V		30.052.497	340	10
KNL38G-00 + NDLG-30 BD	38 A	24 V		30.052.498	340	10
KNL38G-00 + NDLG-21 MD	38 A	220 V	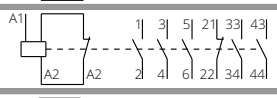	30.052.499	340	10
KNL38G-00 + NDLG-21 ED	38 A	48 V		30.052.500	340	10
KNL38G-00 + NDLG-21 BD	38 A	24 V		30.052.501	340	10
KNL38G-00 + NDLG-12 MD	38 A	220 V	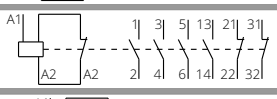	30.052.502	340	10
KNL38G-00 + NDLG-12 ED	38 A	48 V		30.052.503	340	10
KNL38G-00 + NDLG-12 BD	38 A	24 V		30.052.504	340	10
KNL38G-00 + NDLG-10 MD	38 A	220 V	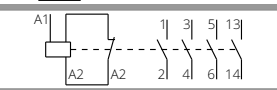	30.052.505	340	10
KNL38G-00 + NDLG-10 ED	38 A	48 V		30.052.506	340	10
KNL38G-00 + NDLG-10 BD	38 A	24 V		30.052.507	340	10
KNL38G-00 + NDLG-01 MD	38 A	220 V	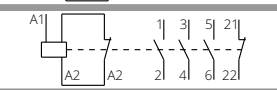	30.052.508	340	10
KNL38G-00 + NDLG-01 ED	38 A	48 V		30.052.509	340	10
KNL38G-00 + NDLG-01 BD	38 A	24 V		30.052.510	340	10
KNL38G-00 + NPLG [1] MD	38 A	220 V	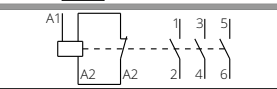	30.052.511	310	10
KNL38G-00 + NPLG [1] ED	38 A	48 V		30.052.512	310	10
KNL38G-00 + NPLG [1] BD	38 A	24 V		30.052.513	310	10

Simultaneous application of NDLG+NPL and NDL+NPLG snap-on auxiliary switch blocks is available.

[1] 57 mm widths

ORDERING DATA

Standard control voltages and designations (AC)

for contactors KNL6 - KNL38

V (50/60 Hz)	24	42	48	110/125	220/240	380/415	440	500
Designations	B7	D7	E7	F7	M7	Q7	R7	S7

Standard control voltages and designations (DC)

for contactors KNL6G - KNL38G

V	12	24	48	60	72	110	125	220	240
Designations	JD	BD	ED	ND	SD	FD	GD	MD	MUD

KNL16 – 10 – M7

- M7 – Control voltage
- 10 – Version of contacts
- KNL16 – Type

KNLG + NDL

KNL22G-00 – 22 – BD

- BD – Control voltage
- 22 – NDL snap-on auxiliary switch block
- KNL22G-00 – Type

NOTE:
The type designation and control voltage are stated when oredring the contactors.

Spare parts: DC coils for KN6G - KNL38G

Type	Ordering No.	Weight (g)	Packaging (pcs)
12	38.502.516	78	1
24	38.502.397	78	1
48	38.502.399	78	1
60	38.502.400	78	1
72	38.502.464	78	1
110	38.502.401	78	1
125	38.502.528	78	1
220	38.502.386	78	1
220	38.502.386	78	1
240	38.502.402	78	1

KNL6(G)

	Type	Symbol	Unit	KNL6	KNL6G
GENERAL	Standards			IEC/EN 60947-5-1, IEC 60947-4-1, UL 508	
	Approvals			CE, UL, CSA, EAC	CE, EAC
	Module width		mm	45	45
	Number of poles			4	
	Degree of protection			IP20	
	Pollution degree			3	
	Climatic conditions			95 % relative humidity	
	Ambient temperature:				
	open		°C	-20 ... +55	
	closed			-20 ... +45	
	Storage temperature		°C	-30 ... +80	
	Maximum altitude U_i and U_e is reduced for 1.2 % and I_e for 0.4 % for every additional 100 m		m	2000	
	Number of contactors or switches side-by-side:				
	≤40 °C (40 ... 55) °C			no limitation	
	Noise level (operation)		dB	30	20
	Maximum operating frequency with no load		op. c./h	3.000	
	Mechanical endurance		op. c.	10.000.000	
	Weight		g	300	300
MAIN CIRCUIT	Contact reliability			≥17 V; ≥50 mA	
	Maximum back-up fuse for short-circuit protection gL and gG: coordination type 2		A	20	
	Rated insulation voltage	U_i	V	690	
	Rated impulse withstand voltage	U_{imp}	kV	6	
	Rated operational voltage	U_e	V	690	
	Rated frequency	f	Hz	50/60	
	Thermal current	I_{th}	A	20	
	Rated operational current for AC-1, AC-7a and AC-21	I_e	A	20	
	Maximum back-up fuse for short-circuit protection gL and gG: coordination type 2		A	20	
	Rated operational current for AC-15:				
	single-phase 230 V	I_c	A	6	
	single-phase 400 V			4	
	single-phase 500 V			2	
	single-phase 690 V			1	
	Maximum operating frequency for AC-15		op. c./h	1.200	
	Electrical endurance for AC-15		op. c.	1.000.000	
	Rated operational current for DC-13: 1 pole ... 24 V DC/48 V DC/60 V DC/110 V DC/ 220 V DC		A	10 / 6 / 4 /0.9 / 0.4	
	Maximum operating frequency for DC-13		op. c./h	1.200	
	Terminal capacity:				
	rigid (solid and stranded)	S	mm^2	0.75 ... 6	
	flexible			0.5 ... 6	
	Length of removed wire insulation		mm	10	
	Screw			M3.5	
	Screw head			PZ2	
	Tightening torque		Nm	1.4	
COIL	Range of control voltage for switch-on	U_c	%	85 ... 110	
	Range of control voltage for drop out	U_c	%	20 ... 75	10 ... 75
	Kind of voltage			AC	DC
	Standard control voltages	U_c	V	1)	2)
	Frequency of AC control voltage	f	Hz	50/60	/
	Control mode			remote control with U_c	
	Coil consumption:				
	switch-on		VA/W	66/48	-/110
	operation			8/2.5	-/3
	Delays:				
	make		ms	10 ... 25	10 ... 20
	brake			10 ... 15	5 ... 15
	Terminal capacity:				
	rigid (solid and stranded)		mm^2	0.75 ... 4	
	flexible			0.75 ... 4	
	Length of removed wire insulation		mm	10	
	Screw			M3.5	
	Screw head			PZ2	
	Tightening torque		Nm	1.4	

1) 12,24,48,110/125,220/240,380/415,440/460,480/520,550/600 V **2)** 12,24,48,60,72,110,125,220,240 V

KNL6(G)

SAFETY	Type	Symbol	Unit	KNL6	KNL6G
	MTTF - Mean time to failure MTTF = 1/λ = B10/(0.1 n_{op})	AC-15 DC-13	h	12.500 10.000	
	$MTTF_d$ - Mean time to failure dangerous MTTFd = 1/λ_d = $B10_d$/(0.1 n_{op})	AC-15 DC-13	h	16.666 13.333	
	B10 - Number of operating cycles until 10 % of devices fail	AC-15 DC-13	op. c.	750.000 600.000	
	$B10_d$ = B10/ratio of dangerous failures	AC-15 DC-13	op. c.	1.000.000 800.000	
	λ - Failure rate λ = (0.1 n_{op})/B10	AC-15 DC-13	1/h	0.00008 0.0001	
	λ_d - Failure rate dangerous λ_d = (0.1 n_{op})/$B10_d$	AC-15 DC-13	1/h	0.00006 0.000075	
	Ratio of dangerous failures		%	75	
	n_{op} - Operating cycles (operating cycles/h)		op. c./h	600	

Electrical endurance

Diagram 1
Electrical endurance of contactor relays

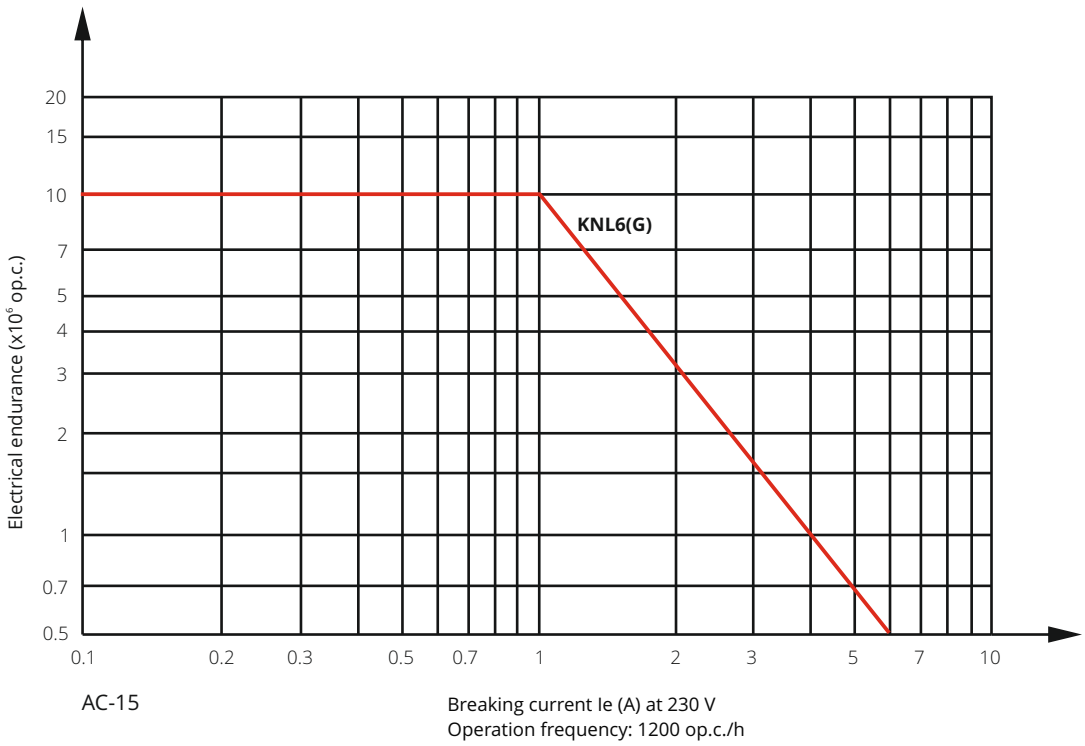

KNL9(G) - KNL12(G)

	Type	Symbol	Unit	KNL9	KNL9G	KNL12	KNL12G
GENERAL	Standards			IEC/EN 60947-5-1, IEC 60947-4-1, UL 508			
	Approvals			CE, UL, CSA, EAC	CE, EAC	CE, UL, CSA, EAC	CE, EAC
	Module width		mm	45	45	45	45
	Number of poles			4			
	Degree of protection			IP20			
	Pollution degree			3			
	Climatic conditions			95 % relative humidity			
	Ambient temperature:						
	open		°C	-25 ... +55			
	closed		°C	-25 ... +45			
	Storage temperature		°C	-30 ... +80			
	Maximum altitude U_i and U_e is reduced for 1.2 % and I_e for 0.4 % for every additional 100 m		m	2000			
	Number of contactors or switches side-by-side:						
	≤40 °C			no limitation			
	(40 ... 55) °C						
	Noise level (operation)		dB	30	20	30	20
	Maximum operating frequency with no load		op. c./h	3.000			
	Mechanical endurance		op. c.	10.000.000			
	Weight		g	300	300	300	300
MAIN CIRCUIT	Contact reliability			≥17 V; ≥50 mA			
	Power dissipation per pole		W	1.3			
	Overload current withstand capability						
	10 s		A	72	72	96	96
	5 s		A	90	90	120	120
	1 s		A	110	110	140	140
	0.001 s		A	220	220	330	330
	Maximum back-up fuse for short-circuit protection gL and gG:						
	coordination type 2		A	25			
	Rated insulation voltage	U_i	V	690			
	Rated impulse withstand voltage	U_{imp}	kV	6			
	Rated operational voltage	U_e	V	690			
	Rated frequency	f	Hz	50/60			
	Thermal current	I_{th}	A	25			
	Rated operational current for AC-1, AC-7a and AC-21	I_e	A	25			
	Operational power for AC-1, AC-7a and AC-21:						
	single-phase 230 V	P_e	kW	5.5			
	three-phase 230 V	P_e	kW	9			
	three-phase 400 V	P_e	kW	16			
	three-phase 500 V	P_e	kW	20			
	three-phase 690 V	P_e	kW	28			
	Maximum operating frequency for AC-1, AC-7a and AC-21		op. c./h	600			
	Electrical endurance for AC-1, AC-7a and AC-21		op. c.	200.000			
	Rated operational current for AC-3, AC-3e, AC-7b and AC-23 (at 400 V)	I_e	A	9	9	12	12
	Operational power for AC-3, AC-3e, AC-7b and AC-23:						
	single-phase 230 V	P_e	kW	1.1	1.1	1.5	1.5
	three-phase 230 V	P_e	kW	2.2	2.2	3	3
	three-phase 400 V	P_e	kW	4	4	5.5	5.5
	three-phase 500 V	P_e	kW	5.5	5.5	5.5	5.5
	three-phase 690 V	P_e	kW	5.5	5.5	7.5	7.5
	Maximum operating frequency for AC-3, AC-3e, AC-7b and AC-23		op. c./h	600			
	Electrical endurance for AC-3, AC-3e, AC-7b and AC-23		op. c.	1.000.000			
	Rated operational current for AC-4 (at 400 V)	I_e	A	3.6	3.6	4.9	4.9
	Operational power for AC-4:						
	three-phase 230 V	P_e	kW	0.75	0.75	1.1	1.1
	three-phase 400 V	P_e	kW	1.5	1.5	2.2	2.2
	three-phase 500 V	P_e	kW	1.5	1.5	2.2	2.2
	three-phase 690 V	P_e	kW	1.5	1.5	2.2	2.2
	Maximum operating frequency for AC-4		op. c./h	300			
	Electrical endurance for AC-4		op. c.	300.000			
	Rated motor power according to standards UL and CSA:						
	single-phase 115 V	P_e	HP	3/4	3/4 [1]	1	1 [1]
	single-phase 230 V	P_e	HP	1.5	1.5 [1]	2	2 [1]
	three-phase 230 V	P_e	HP	3	3 [1]	3	3 [1]
	three-phase 460 V	P_e	HP	5	5 [1]	5	5 [1]
	three-phase 575 V	P_e	HP	7.5	7.5 [1]	7.5	7.5 [1]
	Electrical endurance for motors acc. to UL and CSA		op. c.	1.000.000			

[1] No UL/CSA ratings; data only for indication and reference purposes only

KNL9(G) - KNL12(G)

	Type	Symbol	Unit	KNL9	KNL9G	KNL12	KNL12G
MAIN CIRCUIT	Switching of capacitors AC-6b and AC-7c (at 230 V)	C	µF	50	50	66	66
	Maximum operating frequency for AC-6b and AC-7c		op. c./h	600			
	Switching of capacitors AC-6b and AC-7c (at 230 V)		op. c.	100.000			
	Rated operational current for DC-1 (L/R ≤ 1 ms):	I_e	A				
	1 pole ... 24 V DC/ 110 V DC/ 220 V DC			15 / 6 / 4			
	2 poles in series ... 24 V DC/ 110 V DC/ 220 V DC			18 / 12 / 8			
	3 poles in series ... 24 V DC/ 110 V DC/ 220 V DC			20 / 15 / 10			
	Maximum operating frequency for DC-1		op. c./h	300			
	Rated operational current for DC-3 (L/R ≤ 2 ms):	I_e	A				
	1 pole ... 24 V DC/ 110 V DC/ 220 V DC			12 / 2 / 0.75			
	2 poles in series ... 24 V DC/ 110 V DC/ 220 V DC			15 / 8 / 1.5			
	3 poles in series ... 24 V DC/ 110 V DC/ 220 V DC			18 / 12 / 6			
	Maximum operating frequency for DC-3		op. c./h	300			
	Rated operational current for DC-5 (L/R ≤ 7.5 ms):	I_e	A				
	1 pole ... 24 V DC/ 110 V DC/ 220 V DC			12 / 2 / 0.75			
	2 poles in series ... 24 V DC/ 110 V DC/ 220 V DC			15 / 8 / 1.5			
	3 poles in series ... 24 V DC/ 110 V DC/ 220 V DC			18 / 12 / 6			
	Maximum operating frequency for DC-5		op. c./h	300			
	Terminal capacity:	S	mm^2				
	rigid (solid and stranded)			0.75 ... 6			
	flexible			0.5 ... 6			
	Length of removed wire insulation		mm	10			
	Screw			M3.5			
	Screw head			PZ2			
	Tightening torque		Nm	1.4			
AUXILIARY CIRCUIT	Maximum back-up fuse for short-circuit protection gL and gG: coordination type 2		A	20			
	Rated insulation voltage	U_i	V	690			
	Rated operational current for AC-15:	I_e	A				
	single-phase 230 V			6			
	single-phase 400 V			4			
	single-phase 500 V			2			
	single-phase 690 V			1			
	Maximum operating frequency for AC-15		op. c./h	1.200			
	Electrical endurance for AC-15		op. c.	1.000.000			
	Rated operational current for DC-13:						
	1 pole ... 24 V DC/48 V DC/60 V DC/110 V DC/ 220 V DC		A	10 / 6 / 4 /0.9 / 0.4			
	Maximum operating frequency for DC-13		op. c./h	1.200			
	Terminal capacity:	S	mm^2				
	rigid (solid and stranded)			0.75 ... 6			
	flexible			0.5 ... 6			
	Length of removed wire insulation		mm	10			
	Screw			M3.5			
	Screw head			PZ2			
	Tightening torque		Nm	1.4			
COIL	Range of control voltage for switch-on	U_c	%	85 ... 110			
	Range of control voltage for drop out	U_c	%	20 ... 75	10 ... 75	20 ... 75	10 ... 75
	Kind of voltage			AC	DC	AC	DC
	Standard control voltages	U_c	V	1)	2)	1)	2)
	Frequency of AC control voltage	f	Hz	50/60	/	50/60	/
	Control mode				remote control with U_c		
	Coil consumption:		VA/W				
	switch-on			66/48	-/110	66/48	-/110
	operation			8/2.5	-/3	8/2.5	-/3
	Delays:		ms				
	make			10 ... 25	10 ... 20	10 ... 25	10 ... 20
	brake			10 ... 15	5 ... 15	10 ... 15	5 ... 15
	Terminal capacity:		mm^2				
	rigid (solid and stranded)			0.75 ... 4			
	flexible			0.5 ... 2.5			
	Length of removed wire insulation		mm	10			
	Screw			M3.5			
	Screw head			PZ2			
	Tightening torque		Nm	1.4			

1) 12,24,48,110/125,220/240,380/415,440/460,480/520,550/600 V

2) 12,24,48,60,72,110,125,220,240 V

KNL9(G) - KNL12(G)

	Type	Symbol	Unit	KNL9	KNL9G	KNL12	KNL12G
SAFETY	MTTF - Mean time to failure MTTF = 1/λ = B10/(0.1 n_{op})	AC-1 AC-3	h	5.000 25.000			
	$MTTF_d$ - Mean time to failure dangerous MTTFd = 1/λ_d = $B10_d$/(0.1 n_{op})	AC-1 AC-3	h	6.666 33.333			
	B10 - Number of operating cycles until 10 % of devices fail	AC-1 AC-3	op. c.	150.000 750.000			
	$B10_d$ - Number of operating cycles until 10 % of device dangerous $B10_d$ = B10/ratio of dangerous failures	AC-1 AC-3	op. c.	200.000 1.000.000			
	λ - Failure rate λ = (0.1 n_{op})/B10	AC-1 AC-3	1/h	0.0002 0.00004			
	λ_d - Failure rate dangerous λ_d = (0.1 n_{op})/$B10_d$	AC-1 AC-3	1/h	0.00015 0.00003			
	Ratio of dangerous failures		%	75			
	n_{op} - Operating cycles (operating cycles/h)		op. c./h	300			

KNL16(G) - KNL18(G)

	Type	Symbol	Unit	KNL16	KNL16G	KNL18	KNL18G
GENERAL	Standards			IEC/EN 60947-5-1, IEC 60947-4-1, UL 508			
	Approvals			CE, UL, CSA, EAC	CE, EAC	CE, EAC	CE, EAC
	Module width		mm	45	45	45	45
	Number of poles			4			
	Degree of protection			IP20			
	Pollution degree			3			
	Climatic conditions			95 % relative humidity			
	Ambient temperature: open closed		°C	 -25 ... +55 -25 ... +45			
	Storage temperature		°C	-30 ... +80			
	Maximum altitude U_i and U_e is reduced for 1.2 % and I_e for 0.4 % for every additional 100 m		m	2000			
	Number of contactors or switches side-by-side: ≤40 °C (40 ... 55) °C			no limitation			
	Noise level (operation)		dB	30	20	30	20
	Maximum operating frequency with no load		op. c./h	3.000			
	Mechanical endurance		op. c.	10.000.000			
	Weight		g	300	300	300	300

KNL16(G) - KNL18(G)

	Type	Symbol	Unit	KNL16	KNL16G	KNL18	KNL18G
MAIN CIRCUIT	Contact reliability			≥17 V; ≥50 mA			
	Power dissipation per pole			1.3	1.3	1.9	1.9
	Overload current withstand capability						
	10 s		A	128	128	144	144
	5 s			150	150	170	170
	1 s			180	180	200	200
	0.001 s			450	450	500	500
	Maximum back-up fuse for short-circuit protection gL and gG: coordination type 2		A	35			
	Rated insulation voltage	U_i	V	690			
	Rated impulse withstand voltage	U_{imp}	kV	6			
	Rated operational voltage	U_e	V	690			
	Rated frequency	f	Hz	50/60			
	Thermal current	I_{th}	A	25	25	32	32
	Rated operational current for AC-1, AC-7a and AC-21	I_e	A	25	25	32	32
	Operational power for AC-1, AC-7a and AC-21:						
	single-phase 230 V	P_e	kW	5.5		7	
	three-phase 230 V			9		12	
	three-phase 400 V			16		21	
	three-phase 500 V			20		26	
	three-phase 690 V			28		36	
	Maximum operating frequency for AC-1, AC-7a and AC-21		op. c./h	600			
	Electrical endurance for AC-1, AC-7a and AC-21		op. c.	200 000			
	Rated operational current for AC-3, AC-3e, AC-7b and AC-23	I_e	A	16	16	18	18
	Operational power for AC-3, AC-3e, AC-7b and AC-23:						
	single-phase 230 V	P_e	kW	2.2	2.2	2.2	2.2
	three-phase 230 V			4	4	4	4
	three-phase 400 V			7.5	7.5	9	9
	three-phase 500 V			7.5	7.5	9	9
	three-phase 690 V			7.5	7.5	9	9
	Maximum operating frequency for AC-3, AC-3e, AC-7b and AC-23		op. c./h	600			
	Electrical endurance for AC-3, AC-3e, AC-7b and AC-23		op. c.	900.000		800.000	
	Rated operational current for AC-4	I_e	A	6.5	6.5	6.5	6.5
	Operational power for AC-4:						
	three-phase 230 V	P_e	kW	1.5	1.5	1.5	1.5
	three-phase 400 V			3	3	3	3
	three-phase 500 V			3	3	3	3
	three-phase 690 V			3	3	3	3
	Maximum operating frequency for AC-4		op. c./h	300			
	Electrical endurance for AC-4		op. c.	300.000			
	Rated motor power according to standards UL and CSA:						
	single-phase 115 V	P_e	HP	1.5	1.5 [1)]	1.5 [1)]	1.5 [1)]
	single-phase 230 V			3	3 [1)]	3 [1)]	3 [1)]
	three-phase 230 V			5	5 [1)]	5 [1)]	5 [1)]
	three-phase 460 V			7.5	7.5 [1)]	7.5 [1)]	7.5 [1)]
	three-phase 575 V			10	10 [1)]	10 [1)]	10 [1)]
	Electrical endurance for motors acc. to UL and CSA		op. c.	900.000		800.000	

[1)] No UL/CSA ratings; data only for indication and reference purposes only

KNL16(G) - KNL18(G)

	Type	Symbol	Unit	KNL16	KNL16G	KNL18	KNL18G
MAIN CIRCUIT	Switching of capacitors AC-6b and AC-7c (at 230 V)	C	µF	88 (300 for KNL16St4)	88	100	100
	Maximum operating frequency for AC-6b and AC-7c		op. c./h	600			
	Switching of capacitors AC-6b and AC-7c (at 230 V)		op. c.	100.000			
	Rated operational current for DC-1 (L/R ≤ 1 ms):	I_e	A				
	1 pole ... 24 V DC/ 110 V DC/ 220 V DC			15 / 6 / 4			
	2 poles in series ... 24 V DC/ 110 V DC/ 220 V DC			18 / 12 / 8			
	3 poles in series ... 24 V DC/ 110 V DC/ 220 V DC			20 / 15 / 10			
	Maximum operating frequency for DC-1		op. c./h	300			
	Rated operational current for DC-3 (L/R ≤ 2 ms):	I_e	A				
	1 pole ... 24 V DC/ 110 V DC/ 220 V DC			12 / 2 / 0.75			
	2 poles in series ... 24 V DC/ 110 V DC/ 220 V DC			15 / 8 / 1.5			
	3 poles in series ... 24 V DC/ 110 V DC/ 220 V DC			18 / 12 / 6			
	Maximum operating frequency for DC-3		op. c./h	300			
	Rated operational current for DC-5 (L/R ≤ 7.5 ms):	I_e	A				
	1 pole ... 24 V DC/ 110 V DC/ 220 V DC			12 / 2 / 0.75			
	2 poles in series ... 24 V DC/ 110 V DC/ 220 V DC			15 / 8 / 1.5			
	3 poles in series ... 24 V DC/ 110 V DC/ 220 V DC			18 / 12 / 6			
	Maximum operating frequency for DC-5		op. c./h	300			
	Terminal capacity:	S	mm^2				
	rigid (solid and stranded)			0.75 ... 6			
	flexible			0.5 ... 6			
	Length of removed wire insulation		mm	10			
	Screw			M3.5			
	Screw head			PZ2			
	Tightening torque		Nm	1.4			
AUXILIARY CIRCUIT	Maximum back-up fuse for short-circuit protection gL and gG: coordination type 2		A	20			
	Rated insulation voltage	U_i	V	690			
	Rated operational current for AC-15:	I_e	A				
	single-phase 230 V			6			
	single-phase 400 V			4			
	single-phase 500 V			2			
	single-phase 690 V			1			
	Maximum operating frequency for AC-15		op. c./h	1.200			
	Electrical endurance for AC-15		op. c.	1.000.000			
	Rated operational current for DC-13: 1 pole ... 24 V DC/48 V DC/60 V DC/110 V DC/ 220 V DC		A	10 / 6 / 4 /0.9 / 0.4			
	Maximum operating frequency for DC-13		op. c./h	1.200			
	Terminal capacity:	S	mm^2				
	rigid (solid and stranded)			0.75 ... 6			
	flexible			0.5 ... 6			
	Length of removed wire insulation		mm	10			
	Screw			M3.5			
	Screw head			PZ2			
	Tightening torque		Nm	1.4			
COIL	Range of control voltage for switch-on	U_c	%	85 ... 110			
	Range of control voltage for drop out	U_c	%	20 ... 75	10 ... 75	20 ... 75	10 ... 75
	Kind of voltage			AC	DC	AC	DC
	Standard control voltages	U_c	V	1)	2)	1)	2)
	Frequency of AC control voltage	f	Hz	50/60	/	50/60	/
	Control mode				remote control with U_c		
	Coil consumption:		VA/W				
	switch-on			66/48	-/110	66/48	-/110
	operation			8/2.5	-/3	8/2.5	-/3
	Delays:		ms				
	make			10 ... 25	10 ... 20	10 ... 25	10 ... 20
	brake			10 ... 15	5 ... 15	10 ... 15	5 ... 15
	Terminal capacity:		mm^2				
	rigid (solid and stranded)			0.75 ... 4			
	flexible			0.75 ... 4			
	Length of removed wire insulation		mm	10			
	Screw			M3.5			
	Screw head			PZ2			
	Tightening torque		Nm	1.4			

1) 12,24,48,110/125,220/240,380/415,440/460,480/520,550/600 V

2) 12,24,48,60,72,110,125,220,240 V

KNL16(G) - KNL18(G)

	Type	Symbol	Unit	KNL16	KNL16G	KNL18	KNL18G
SAFETY	MTTF - Mean time to failure MTTF = 1/λ = B10/(0.1 n_{op})	AC-1	h	5.000			
		AC-3		22.500		20.000	
	$MTTF_d$ - Mean time to failure dangerous MTTFd = 1/λ_d = $B10_d$/(0.1 n_{op})	AC-1	h	6.666			
		AC-3		30.000		26.666	
	B10 - Number of operating cycles until 10 % of devices fail	AC-1	op. c.	150.000			
		AC-3		675.000		600.000	
	$B10_d$ - Number of operating cycles until 10 % of device dangerous $B10_d$ = B10/ratio of dangerous failures	AC-1	op. c.	200.000			
		AC-3		900.000		800.000	
	λ - Failure rate λ = (0.1 n_{op})/B10	AC-1	1/h	0.0002			
		AC-3		0.000044		0.00005	
	λ_d - Failure rate dangerous λ_d = (0.1 n_{op})/$B10_d$	AC-1	1/h	0.00015			
		AC-3		0.00003		0.00004	
	Ratio of dangerous failures		%	75			
	n_{op} - Operating cycles (operating cycles/h)		op. c./h	300			

KNL22(G) - KNL38(G)

	Type	Symbol	Unit	KNL22	KNL22G NPLG/NDLG	KNL30	KNL30G NPLG/NDLG	KNL38	KNL38G NPLG/NDLG
GENERAL	Standards			IEC/EN 60947-5-1, IEC 60947-4-1, UL 508					
	Approvals			CE, UL, CSA, EAC	CE, EAC	CE, UL, CSA, EAC	CE, EAC	CE, EAC	CE, EAC
	Module width		mm	45	56/45	45	56/45	45	56/45
	Number of poles			3					
	Degree of protection			IP20					
	Pollution degree			3					
	Climatic conditions			95 % relative humidity					
	Ambient temperature: open		°C	-25 ... +55					
	closed			-25 ... +45					
	Storage temperature		°C	-30 ... +80					
			m	2000					
	Number of contactors or switches side-by-side:								
	≤40 °C (40 ... 55) °C			no limitation					
	Noise level (operation)		dB	30	20	30	20	30	20
	Maximum operating frequency with no load		op. c./h	3.000					
	Mechanical endurance		op. c.	10.000.000					
	Weight		g	320	360/410	320	360/410	320	360/410

KNL22(G) - KNL38(G)

	Type	Symbol	Unit	KNL22	KNL22G NPLG/NDLG	KNL30	KNL30G NPLG/NDLG	KNL38	KNL38G NPLG/NDLG
MAIN CIRCUIT	Contact reliability					≥17 V; ≥50 mA			
	Power dissipation per pole		W	2.3	2.3	2.3	2.3	2.3	2.3
	Overload current withstand capability								
	10 s		A	176	176	240	240	304	304
	5 s			220	220	280	280	320	320
	1 s			250	250	330	330	350	350
	0.001 s			600	600	900	900	900	900
	Maximum back-up fuse for short-circuit protection gL and gG: coordination type 2		A	50					
	Rated insulation voltage	U_i	V	1000					
	Rated impulse withstand voltage	U_{imp}	kV	6					
	Rated operational voltage	U_e	V	1000					
	Rated frequency	f	Hz	50/60					
	Thermal current	I_{th}	A	35	35	35	35	45	45
	Rated operational current for AC-1, AC-7a and AC-21	I_e	A	35	35	35	35	45	45
	Operational power for AC-1, AC-7a and AC-21:								
	single-phase 230 V	P_e	kW	8				10	
	three-phase 230 V			13				17	
	three-phase 400 V			23				29	
	three-phase 500 V			28				37	
	three-phase 690 V			40				50	
	Maximum operating frequency for AC-1, AC-7a and AC-21		op. c./h	600					
	Electrical endurance for AC-1, AC-7a and AC-21		op. c.	200.000					
	Rated operational current for AC-3, AC-3e, AC-7b and AC-23 (at 400 V)	I_e	A	22	22	30	30	38	38
	Operational power for AC-3, AC-3e, AC-7b and AC-23:								
	single-phase 230 V	P_e	kW	2.2	2.2	3.7	3.7	4	4
	three-phase 230 V			5.5	5.5	7.5	7.5	8	8
	three-phase 400 V			11	11	15	15	18.5	18.5
	three-phase 500 V			11	11	15	15	15	15
	three-phase 690 V			11	11	15	15	15	15
	three-phase 1000 V			11	11	15	15	15	15
	Maximum operating frequency for AC-3, AC-3e, AC-7b and AC-23		op. c./h	600					
	Electrical endurance for AC-3, AC-3e, AC-7b and AC-23		op. c.	800.000		400.000			
	Rated operational current for AC-4 (at 400 V)	I_e	A	7.7	7.7	12.5	12.5	14	14
	Operational power for AC-4:								
	three-phase 230 V	P_e	kW	2.2	2.2	4	4	4.5	4.5
	three-phase 400 V			4	4	6.5	6.5	7.5	7.5
	three-phase 500 V			4	4	6.5	6.5	6.5	6.5
	three-phase 690 V			4	4	6.5	6.5	6.5	6.5
	Maximum operating frequency for AC-4		op. c./h	300					
	Electrical endurance for AC-4		op. c.	300.000		250.000		200.000	
	Rated motor power according to standards UL and CSA:								
	single-phase 115 V	P_e	HP	2	2 [1]	2	2 [1]	2	2 [1]
	single-phase 230 V			3	3 [1]	5	5 [1]	5	5 [1]
	three-phase 230 V			7.5	7.5 [1]	10	10 [1]	10	10 [1]
	three-phase 460 V			15	15 [1]	20	20 [1]	20	20 [1]
	three-phase 575 V			15	15 [1]	20	20 [1]	20	20 [1]
	Electrical endurance for motors acc. to UL and CSA		op. c.	800.000		400.000			

[1] No UL/CSA ratings; data only for indication and reference purposes only

KNL22(G) - KNL38(G)

	Type	Symbol	Unit	KNL22	KNL22G NPLG/NDLG	KNL30	KNL30G NPLG/NDLG	KNL38	KNL38G NPLG/NDLG
MAIN CIRCUIT	Switching of capacitors AC-6b and AC-7c (at 230 V)	C	µF	220	220	330	330	350	350
	Maximum operating frequency for AC-6b and AC-7c		op. c./h	600					
	Switching of capacitors AC-6b and AC-7c (at 230 V)		op. c.	100.000					
	Rated operational current for DC-1 (L/R ≤ 1 ms):	I_e	A						
	1 pole ... 24 V DC/ 110 V DC/ 220 V DC			28 / 7 / 4					
	2 poles in series ... 24 V DC/ 110 V DC/ 220 V DC			30 / 23 / 13					
	3 poles in series ... 24 V DC/ 110 V DC/ 220 V DC			32 / 25 / 20					
	Maximum operating frequency for DC-1		op. c./h	300					
	Rated operational current for DC-3 (L/R ≤ 2 ms):	I_e	A						
	1 pole ... 24 V DC/ 110 V DC/ 220 V DC			18 / 2 / 1					
	2 poles in series ... 24 V DC/ 110 V DC/ 220 V DC			23 / 13 / 2					
	3 poles in series ... 24 V DC/ 110 V DC/ 220 V DC			28 / 18 / 9					
	Maximum operating frequency for DC-3		op. c./h	300					
	Rated operational current for DC-5 (L/R ≤ 7.5 ms):	I_e	A						
	1 pole ... 24 V DC/ 110 V DC/ 220 V DC			18 / 2 / 1					
	2 poles in series ... 24 V DC/ 110 V DC/ 220 V DC			23 / 13 / 2					
	3 poles in series ... 24 V DC/ 110 V DC/ 220 V DC			28 / 18 / 9					
	Maximum operating frequency for DC-5		op. c./h	300					
	Terminal capacity:	S	mm^2						
	rigid (solid and stranded)			2.5 ... 10					
	flexible			1.5 ... 10					
	Length of removed wire insulation		mm	10					
	Screw			M4					
	Screw head			PZ2					
	Tightening torque		Nm	1.8					
COIL	Range of control voltage for switch-on	U_c	%	85 ... 110					
	Range of control voltage for drop out	U_c	%	20 ... 75	10 ... 75	20 ... 75	10 ... 75	20 ... 75	10 ... 75
	Kind of voltage			AC	DC	AC	DC	AC	DC
	Standard control voltages	U_c	V	1)	2)	1)	2)	1)	2)
	Frequency of AC control voltage	f	Hz	50/60	/	50/60	/	50/60	/
	Control mode			remote control with U_c					
	Coil consumption:		VA/W						
	switch-on			66/48	-/110	66/48	-/110	66/48	-/110
	operation			8/2.5	-/3	8/2.5	-/3	8/2.5	-/3
	Delays:		ms						
	make			10 ... 20	15 ... 20	10 ... 20	15 ... 20	10 ... 20	15 ... 20
	brake			5 ... 15	5 ... 10	5 ... 15	5 ... 10	5 ... 15	5 ... 10
	Terminal capacity:		mm^2						
	rigid (solid and stranded)			0.75 ... 4					
	flexible			0.5 ... 2.5					
	Length of removed wire insulation		mm	10					
	Screw			M3.5					
	Screw head			PZ2					
	Tightening torque		Nm	1.4					
SAFETY	MTTF - Mean time to failure	AC-1	h	5.000					
	MTTF = 1/λ = B10/(0.1 n_{op})	AC-3		20.000		10.000			
	$MTTF_d$ - Mean time to failure dangerous	AC-1	h	6.666					
	MTTFd = 1/$λ_d$ = $B10_d$/(0.1 n_{op})	AC-3		26.666		13.333			
	B10 - Number of operating cycles until 10 % of devices fail	AC-1	op. c.	150.000					
		AC-3		600.000		300.000			
	$B10_d$ - Number of operating cycles until 10 % of device dangerous	AC-1	op. c.	200.000					
	$B10_d$ = B10/ratio of dangerous failures	AC-3		800.000		400.000			
	λ - Failure rate	AC-1	1/h	0.0002					
	λ = (0.1 n_{op})/B10	AC-3		0.00005		0.0001			
	$λ_d$ - Failure rate dangerous	AC-1	1/h	0.00015					
	$λ_d$ = (0.1 n_{op})/$B10_d$	AC-3		0.00004		0.000075			
	Ratio of dangerous failures		%	75					
	n_{op} - Operating cycles (operating cycles/h)		op. c./h	300					

1) 12,24,48,110/125,220/240,380/415,440/460,480/520,550/600 V

2) 12,24,48,60,72,110,125,220,240 V

KNL22(G) - KNL38(G)

Electrical endurance

Diagram 2
Electrical endurance of motor contactors KNL9(G) - KNL38(G) – **AC-3, AC-3e**

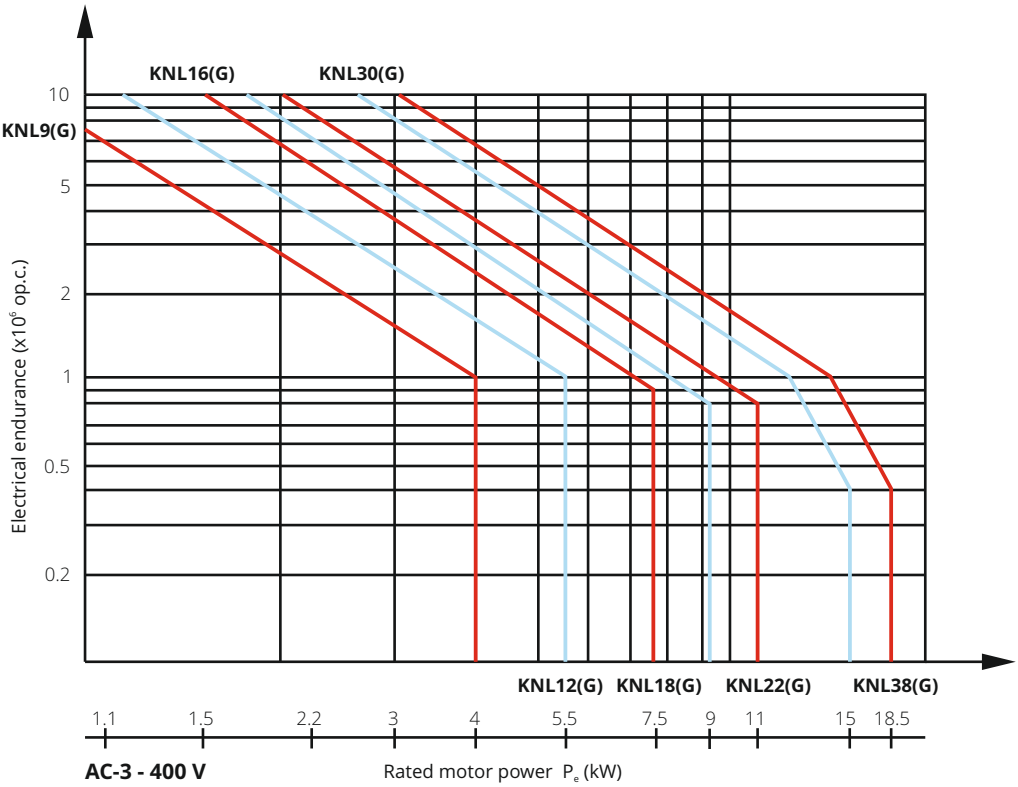

Diagram 3
Electrical endurance of motor contactors KNL9(G) - KNL38(G) –**AC-4**

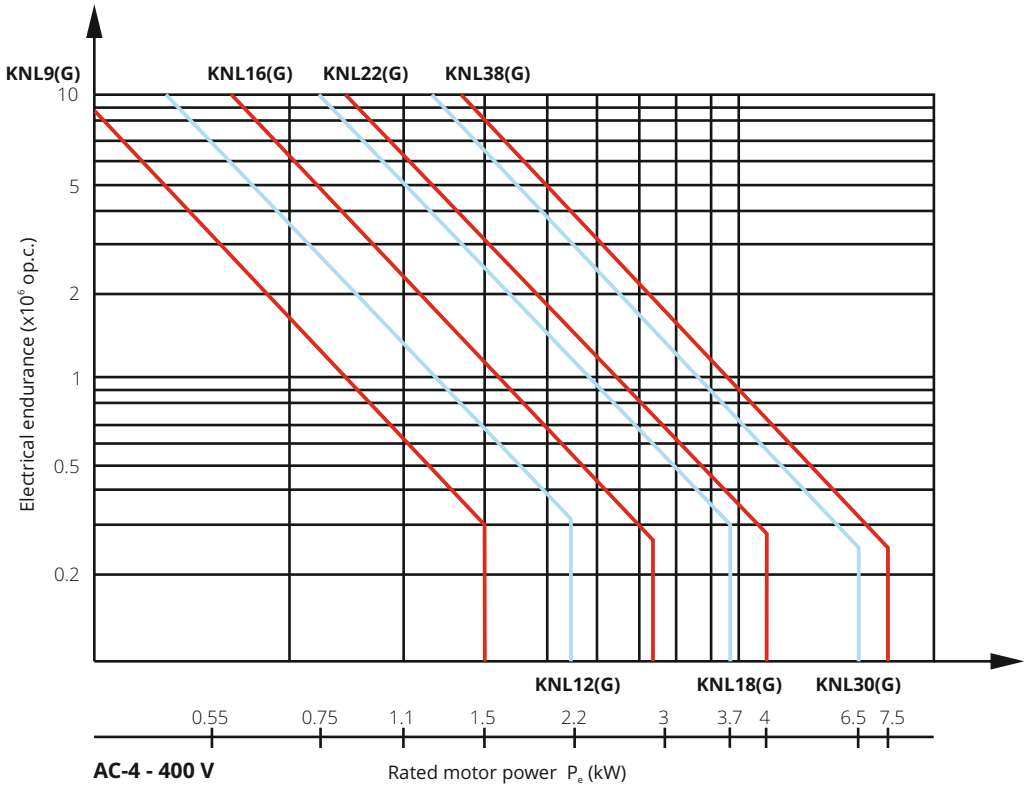

Mounting positions of accessories

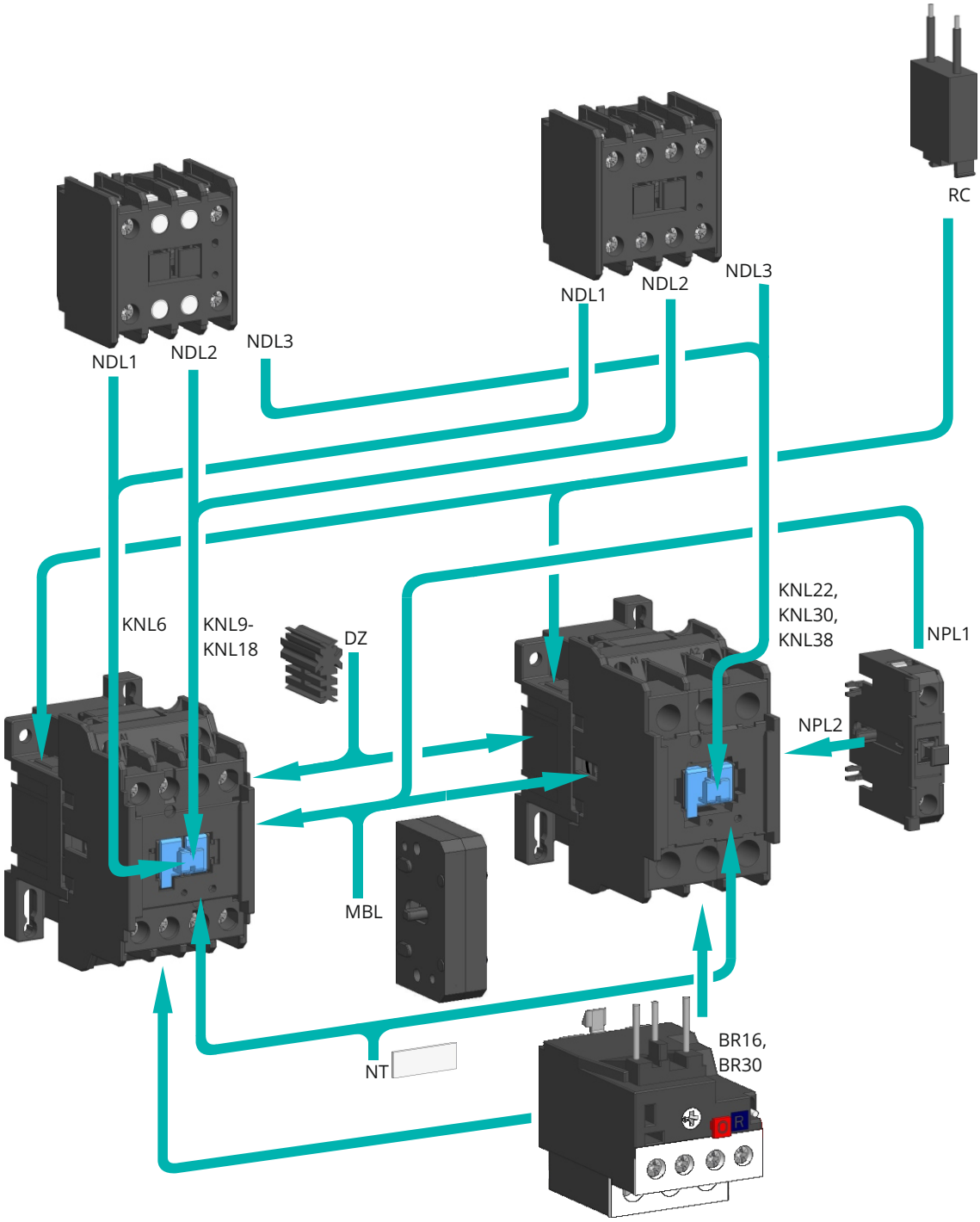

KNL6(G) - KNL38(G)

Snap-on auxiliary switch blocks

	Type	Symbol	Unit	NDL1, NDL2 NDL3, NDLG	NPL1 NPL2
GENERAL	Standards			IEC/EN 60947-5-1, VDE 0660, UL 508	
	Approvals			CE, UL, CSA [1]	
	For use with			NDL1 (KNL6), NDL2 (KNL9-KNL18), NDL3 (KNL22-KNL38), NDLG (KNL6G-KNL38G)	NPL1 (KNL9 - KNL18), NPL2 (KNL22-KNL38)
	Module width			2	0.5
	Number of poles			2 or 4	1
	Degree of protection			IP20	
	Pollution degree			3	
	Ambient temperature				
	open		°C	-25 ... +55	
	closed			-25 .... +45	
	Storage temperature		°C	-30 ... +80	
	Maximum altitude U_i and U_e is reduced for 1.2 % and I_e for 0.4 % for every additional 100 m		m	2000	
	Maximum operating frequency with no load		op. c./h	3000	
	Mechanical endurance		op. c.	10.000.000	
	Weight		g	70	20
AUXILIARY CIRCUIT	Contact reliability			≥17 V; ≥50 mA	
	Maximum back-up fuse for short-circuit protection gL and gG: coordination type 2		A	16	10
	Rated insulation voltage	U_i	V	690	
	Rated impulse withstand voltage	U_{imp}	kV	6	
	Rated operational voltage	U_e	V	690	
	Rated frequency	f	Hz	50 /60	
	Thermal current	I_{th}	A	16	10
	Rated operational current for AC-15:				
	single-phase 230 V	I_e	A	6	
	single-phase 400 V			4	
	single-phase 500 V			2	
	single-phase 690 V			1	
	Maximum operating frequency for AC-15		op. c./h	1.200	
	Electrical endurance for AC-15		op. c.	500.000	
	Switching of auxiliary loads acc. to standard UL and CSA			A600, N600	
	Rated operational current for DC-13: 1 pole ... 24 V DC/ 60 V DC/ 110 V DC/ 220 V DC		A	10 / 4 /0.9 / 0.4	6 / 2.5 /0.5 / 0.2
	Maximum operating frequency for DC-13		op. c./h	1.200	
	Electrical endurance for DC-13		op. c.	500.000	
	Terminal capacity:				
	rigid (solid and stranded)	S	mm^2	0.75 ... 4	
	flexible			0.5 ... 2.5	
	Length of removed wire insulation		mm	10	
	Screw			M3.5	
	Screw head			PZ2	
	Tightening torque		Nm	1.4	1

[1] No UL and CSA for NDLG

KNL6(G) - KNL38(G)

BR16 and BR30 Thermal overload relay

	Type	Symbol	Unit	BR16	BR30
GENERAL	Standards			IEC 60947-4-1, IEC 60947-5-1, UL508	
	Approvals			CE, UL	
	For use with			KNL9(G) ... KNL18(G)	KNL22(G) ... KNL38(G)
	Degree of protection			IP20	
	Ambient temperature				
	operating		°C	-5 ... +55	
	storage			-25 ... +70	
	Dimensions (WxHxD)		mm	45 x 70.5 x 60	45 x 69 x 60
	Operating position			vertical	
	Reset type			auto, manual	
	Maximum altitude above sea level		m	2000	
	Weight		g	115	
MAIN CIRCUIT	Rated insulation voltage	U_i	V	690	
	Rated impulse withstand voltage	U_{imp}	kV	6	
	Rated operational voltage	U_e	V	690	
	Adjustable current	I_r	A	0.1 ... 20	17.5 ... 30
	Rated frequency	f	Hz	50/60	
	Overvoltage category / pollution degree acc. to IEC/EN 60947-1			III / 3	
	Trip class acc. to IEC/EN 60947-4-1			10	
	Temperature compensation range		°C	-5 ... +40	
	Sensitivity to phase failure			yes	
	Power loss at I_n	P	W	5 ... 6.5	
	Terminal capacity		mm^2	1 ... 10	
	Conductor insulation stripping length		mm	10	
	Screw			M4	
	Screw head			PZ2	
	Tightening torque		Nm	1.2	
AUXILIARY CIRCUITS	Rated insulation voltage	U_i	V	690	
	Rated impulse withstand voltage	U_{imp}	kV	6	
	Rated operational voltage	U_e	V	AC: 500 ; DC: 230	
	Overvoltage category / pollution degree acc. to IEC/EN 60947-1			III / 3	
	Thermal current (both contacts)	I_{th}	A	6	
	Contact electrical rating			A600 / Q300	
	Rated operational current AC-15				
	230 V NO	I_e	A	3	
	400 V NO	I_e	A	2	
	500 V NO	I_e	A	1	
	230 V NC	I_e	A	3	
	400 V NC	I_e	A	2	
	500 V NC	I_e	A	1	
	Rated operational current DC-13				
	60 V both contacts	I_e	A	0.45	
	110 V both contacts	I_e	A	0.25	
	230 V both contacts	I_e	A	0.1	
	Terminal capacity		mm^2	0.75 ... 2.5	
	Conductor insulation stripping length		mm	9	
	Screw			M3.5	
	Screw head			PZ2	
	Tightening torque		Nm	0.8	

Connection diagram BR16 and BR30

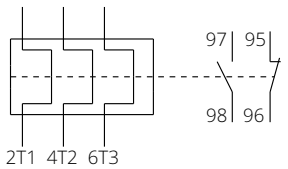

THERMAL OVERLOAD RELAY BR16

Setting ranges and maximum permitted back-up fuses

Seting range (A)	Max. back-up fuse gL/gG – UL 508 (A)	Max. back-up fuse gL/gG (A)
0.16 - 0.25	1	1
0.25 - 0.4	1	1
0.35 - 0.5	1	1
0.45 - 0.63	1	1
0.55 - 0.8	3	2
0.75 - 1	3	2
0.9- 1.3	3	2
1.1 - 1.6	3	2
1.4 - 2	6	4
1.8 - 2.5	6	4
2.3 - 3.2	6	4
2.9 - 4	10	8
3.5 - 4.8	10	8
4.5 - 6.3	15	10
5.5 - 7.5	15	10
7.2 - 10	25	16
9 - 12.5	30	20
11.3 - 16	40	25
15 - 20	50	35

THERMAL OVERLOAD RELAY BR30

Setting ranges and maximum permitted back-up fuses

Seting range (A)	Max. back-up fuse gL/gG – UL 508 (A)	Max. back-up fuse gL/gG (A)
17.5 - 21.5	50	35
21 - 25	60	40
24.5 - 30	70	50
29 - 36	70	50
33 - 38	70	50

Tripping curve BR16 and BR30

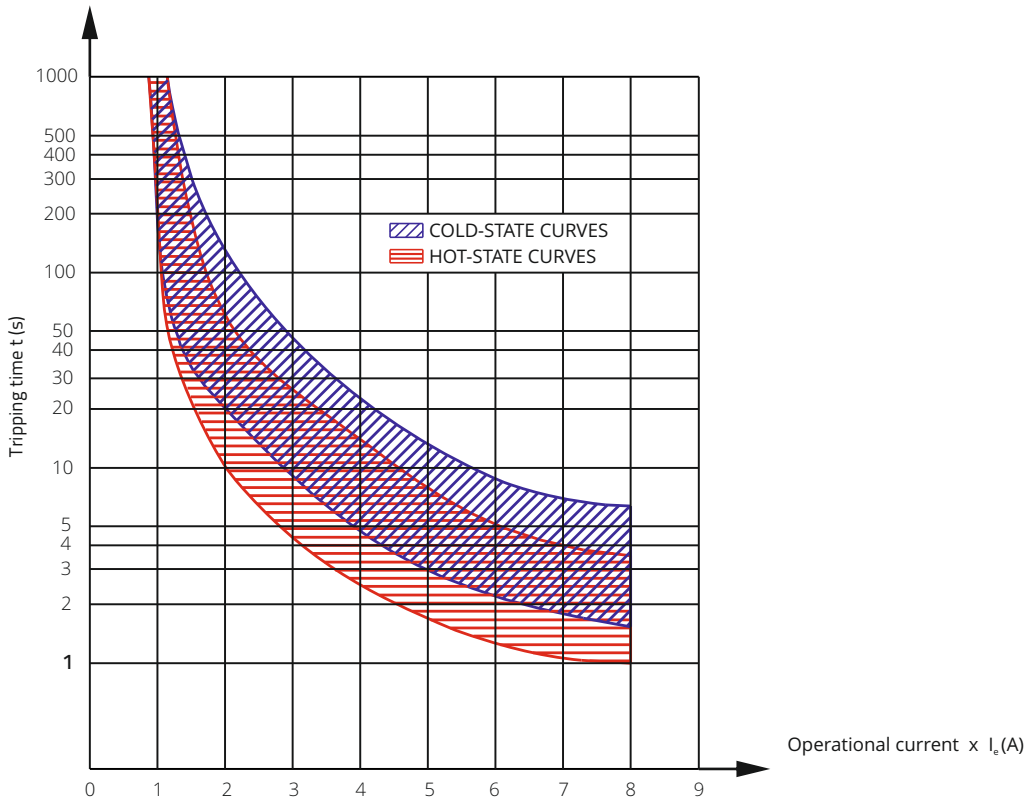

KNL6 ... KNL18

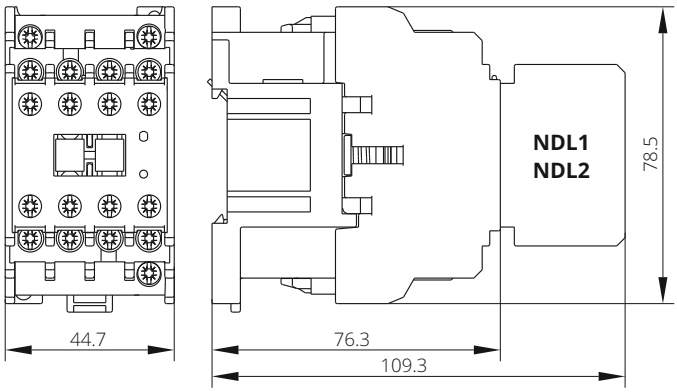

KNL6 ... KNL38 - drilling plan

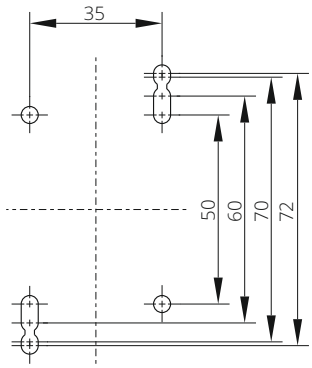

KNL22 ... KNL38

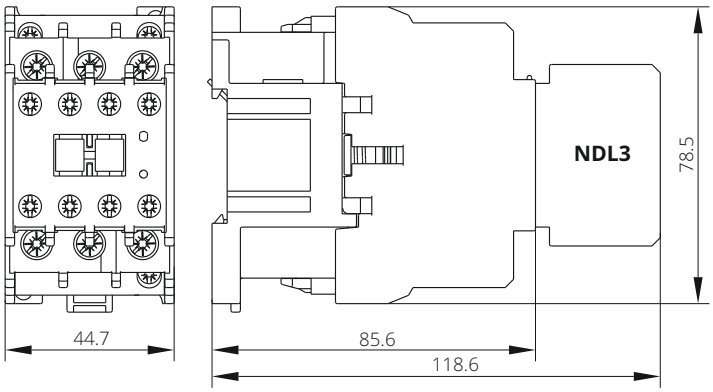

NDL1, NDL2, NDL3

Two and four-pole snap-on auxiliary switch blocks (mounting on a basic contactor)

NDL1 - for KNL6(G)
NDL2 - for KNL9(G) - KNL18(G)
NDL3 - for KNL22(G) - KNL38(G)

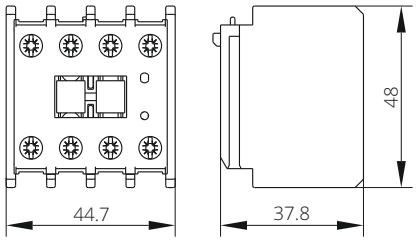

NPL1, NPL2

Single pole snap-on auxiliary switch block (for side mounting + push button)

NPL1 - for KNL9(G) - KNL18(G)
NPL2 - for KNL22(G) - KNL38(G)

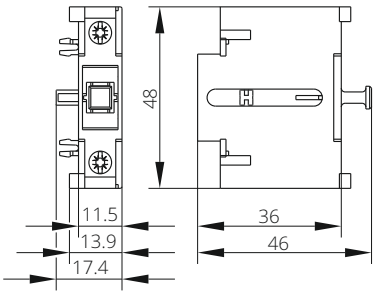

RC suppressor

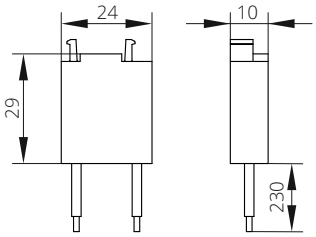

MBL mechanical interlock

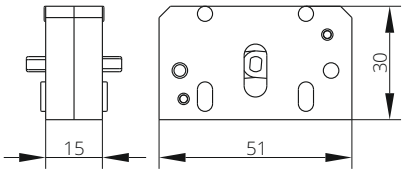

NT identification plate

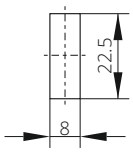

DZ distance spacer

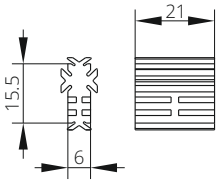

KNL9-KNL18 + NPL1

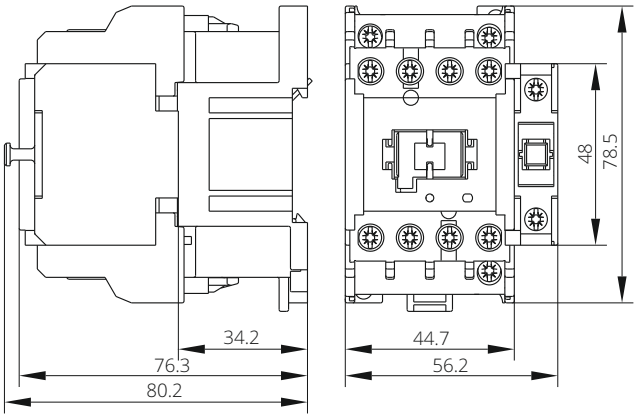

KNL22-KNL38 + NPL2

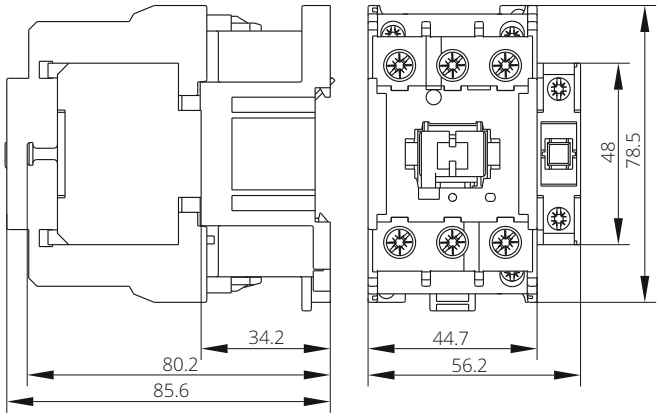

KNL22G-KNL38G + NPLG

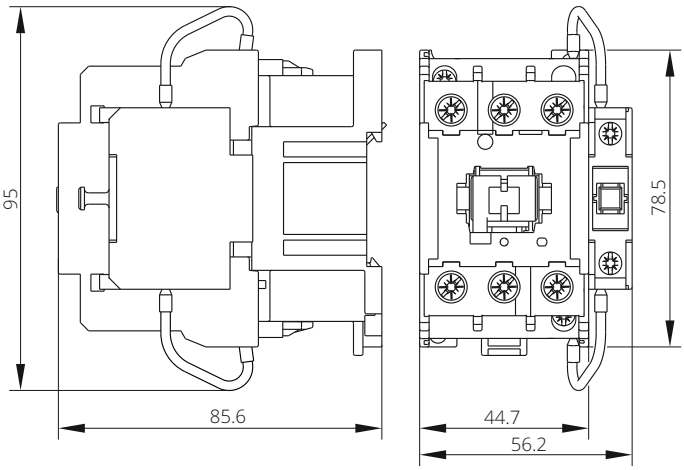

KNL22G-KNL38G + NDLG

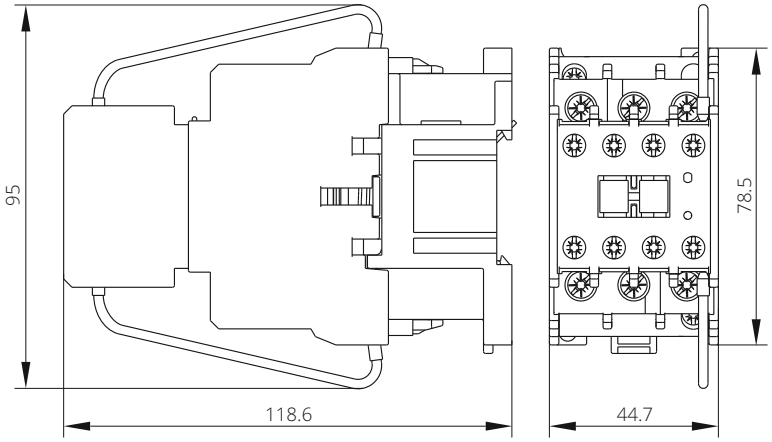

KNL6 ... KNL38 - drilling plan

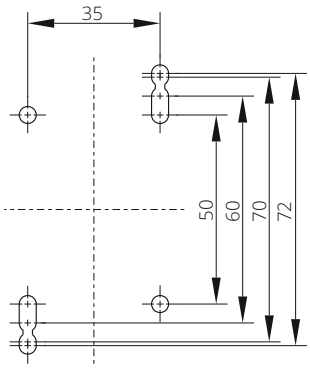

KNL6 ... KNL18 + BR16
Contactor + thermal overload relay

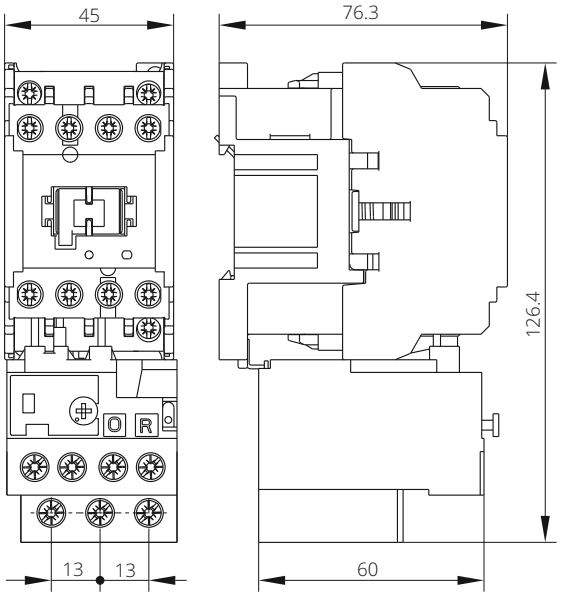

KNL22 ... KNL38 + BR30
Contactor + thermal overload relay

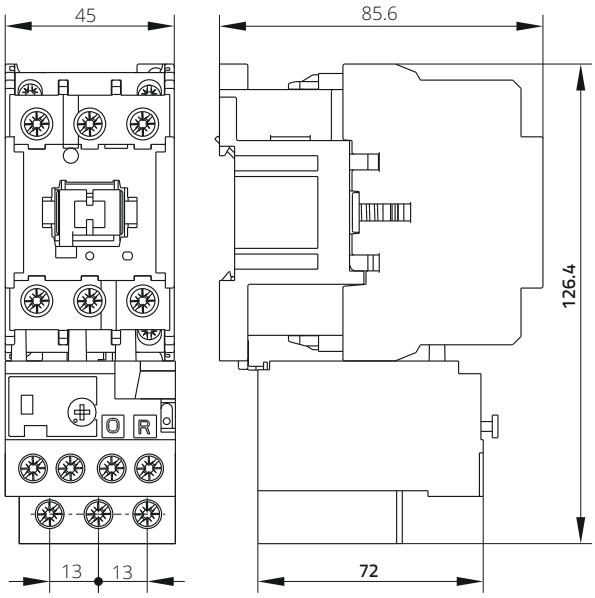

BR16 thermal overload relay

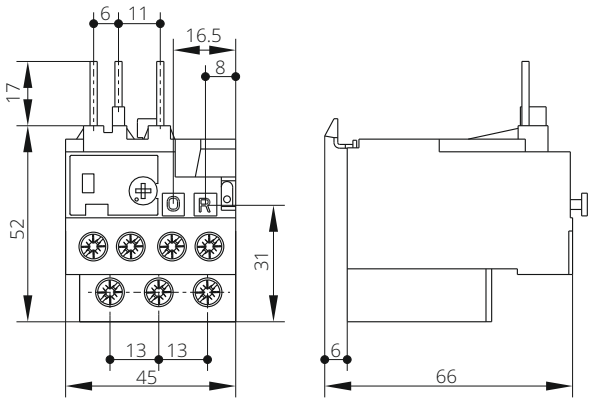

BR30 thermal overload relay

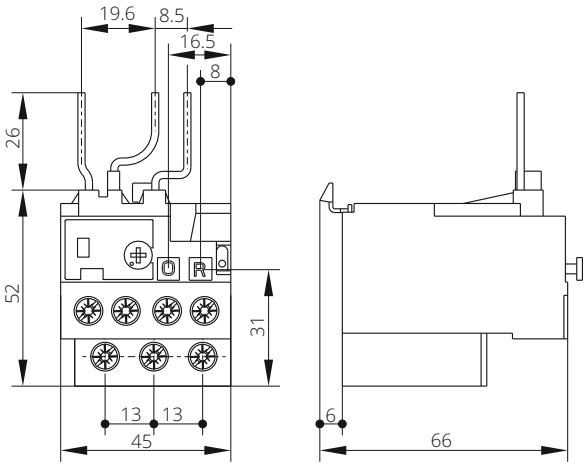

CONTACTORS ARE AN ELECTRICALLY REMOTE CONTROLLED SWITCHES USED FOR SWITCHING A POWER CIRCUIT. THOSE CONTACTORS ARE MAINLY USED FOR SWITCHING ELECTRIC MOTORS, PUMPS, COMPRESSORS, SYSTEMS FOR ENERGY ALTERNATIVE SOURCES, LAMPS ETC.

FOR UNIVERSAL SWITCHING:

- All kind of motors
- Electric heating
- Lights and lightning
- Capacitor
- Other eletrical loads

ADVANCED OPERATION:

- Control combinations

OTHER BENEFITS:

- High contact reliabillity at low voltages
- High electrical and mechanical endurance and high switching capacity
- Wide range of control voltages is avalible

ORDERING DATA

Contactors KNL43 - KNL75 ..... page 1-47
Accessorries for contactors KNL43 - KNL75 ..... page 1-48

Example for Ordering data ..... page 1-47
Technical characteristics ..... page 1-49
Dimensions ..... page 1-56

MOTOR CONTACTORS

AC-3 acc. to IEC/EN 60947-4-1 (3-pole, 65 mm widths)

AC

Type	Rated current I_e	Control voltage 50/60 Hz	Wiring diagram	Ordering No.	Weight (g)	Packaging (pcs)
KNL43-11 Q7	43 A	380/415 V	A1 1 3 5 13 21	30.050.946	930	1
KNL43-11 M7	43 A	220/240 V		30.050.498	930	1
KNL43-11 B7	43 A	24 V	A2 2 4 6 14 22	30.050.482	930	1

AC-3 acc. to UL 508 (3-pole, 65 mm widths)

AC

Type	Rated current I_e	Control voltage 50/60 Hz	Wiring diagram	Ordering No.	Weight (g)	Packaging (pcs)
KNL43-11UL Q7	43 A	380/415 V	A1 1 3 5 13 21	30.051.014	930	1
KNL43-11-UL M7	43 A	220/240 V		30.051.012	930	1
KNL43-11-UL B7	43 A	24 V	A2 2 4 6 14 22	30.051.004	930	1

AC-3 acc. to IEC/EN 60947-4-1 (3-pole, 65 mm widths)

AC

Type	Rated current I_e	Control voltage 50/60 Hz	Wiring diagram	Ordering No.	Weight (g)	Packaging (pcs)
KNL63-11 Q7	63 A	380/415 V	A1 1 3 5 13 21	30.050.951	930	1
KNL63-11 M7	63 A	220/240 V		30.050.499	930	1
KNL63-11 B7	63 A	24 V	A2 2 4 6 14 22	30.050.490	930	1

AC-3 acc. to UL 508 (3-pole, 65 mm widths)

AC

Type	Rated current I_e	Control voltage 50/60 Hz	Wiring diagram	Ordering No.	Weight (g)	Packaging (pcs)
KNL63-11-UL Q7	63 A	380/415 V	A1 1 3 5 13 21	30.051.030	930	1
KNL63-11-UL M7	63 A	220/240 V		30.051.028	930	1
KNL63-11-UL B7	63 A	24 V	A2 2 4 6 14 22	30.051.020	930	1

AC-3 acc. to IEC/EN 60947-4-1 (3-pole, 65 mm widths)

AC

Type	Rated current I_e	Control voltage 50/60 Hz	Wiring diagram	Ordering No.	Weight (g)	Packaging (pcs)
KNL75-11 Q7	70 A	380/415 V	A1 1 3 5 13 21	30.051.102	930	1
KNL75-11 M7	70 A	220/240 V		30.051.103	930	1
KNL75-11 B7	70 A	24 V	A2 2 4 6 14 22	30.051.104	930	1

ORDERING DATA

Standard control voltages and designations (AC)

for contactors KNL43, KNL43UL, KNL63, KNL63UL, KNL75

V (50/60 Hz)	24	42	48	220/240	380/415
Designations	B7	D7	E7	M7	Q7

KNL63 – 11 – M7 – 50/60

- 50/60 – Frequency
- M7 – Control voltage
- 11 – Version of auxiliary contacts
- KNL63 – Type

NOTE:
The type designation and control voltage are stated when oredring the contactors.

KNL43 - KNL75

SNAP-ON AUXILIARY SWITCH BLOCKS

AC-15 acc. to IEC/EN 60947-5-1 (2- and 4-pole)

Type	Rated current I_e	Rated voltage U_e	Version	Ordering No.	Weight (g)	Packaging (pcs)
NDL4 (for KNL43, KNL43ULKNL63, KNL63UL, KNL75)	6 A	230 V	-11	38.423.011	66	10
			-02	38.423.012		
			-20	38.423.473		
			-22	38.422.910		
			-31	38.422.911		
			-13	38.423.013		
			-40	38.423.474		
			-04	38.423.475		

RC suppressor (for KNL43 - KNL75, KNL43UL, KNL63UL)

Type	Control voltage U_c	Wiring diagram	Ordering No.	Weight (g)	Packaging (pcs)
RC1-KNL	12 - 48 V	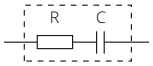	30.017.074	16	10
RC2-KNL	48 - 250 V		30.017.075	16	10
RC3-KNL	250 - 380 V		30.017.076	16	10
RC4-KNL	380 - 600 V		30.017.077	16	10

MECHANICAL INTERLOCK

(for KNL43 - KNL75, KNL43UL, KNL63UL)

Type	Ordering No.	Weight (g)	Packaging (pcs)
MBL43	38.422.197	16	10

Identification plate

Type	Ordering No.	Weight (g)	Packaging (pcs)
NT	37.425.330	1	10

Spare parts: AC coils (50/60 Hz) for KNL43(UL) - KNL75(UL)

Type	Ordering No. (KNL43 - KNL75)	Ordering No. (KNL43UL - KNL75UL)	Weight (g)	Packaging (pcs)
24	38.501.841	38.502.846	140	1
42	38.502.602	38.502.850	140	1
48	38.501.987	38.502.851	140	1
220/240	38.502.286	38.502.847	140	1
380/415	38.502.610	38.502.848	140	1

BR63 THERMAL OVERLOAD RELAY

up to 97 A for KNL43 - KNL75, KNL43UL, KNL63UL contactors

Type	Setting range (A)	Max. backup fuse gL/gG Coordination 1 (A)	Ordering No.	Weight (g)	Packaging (pcs)
BR63-25	17 ... 25	100	786.050.504	350	1
BR63-36	24.5 ... 36	100	786.050.505		
BR63-47	35 ... 47	125	786.050.506		
BR63-60	45 ... 60	150	786.050.507		
BR63-75	58 ... 75	200	786.050.508		
BR63-90	72 ... 90	250	786.050.509		
BR63-97	77 ... 97	250	786.050.510		

	Type	Symbol	Unit	KNL43 KNL43UL	KNL63 KNL63UL	KNL75
GENERAL	Standards			IEC/EN 60947-5-1, IEC 60947-4-1, IEC/EN 60947-1, UL 508		
	Approvals			CE, EAC (UL & CSA only for KNL43UL and KNL63UL)		CE, EAC
	Module width		mm	65		
	Number of poles			3		
	Degree of protection			IP20		
	Pollution degree			3		
	Climatic conditions			95 % relative humidity		
	Ambient temperature:					
	open		°C	-20 ... +60		
	closed		°C	-20 ... +45		
	Storage temperature		°C	-30 ... +80		
	Maximum altitude U_i and U_e is reduced for 1.2 % and I_e for 0.4 % for every additional 100 m		m	2000		
	Number of contactors or switches side-by-side:					
	≤40 °C			no limitation		
	(40 ... 55) °C					
	Noise level (operation)		dB	30		
	Maximum operating frequency with no load		op. c./h	3.000		
	Mechanical endurance		op. c.	3.000.000		
	Weight		g	930		
MAIN CIRCUIT	Contact reliability			≥17 V; ≥50 mA		
	Power dissipation per pole		W	5	6	6
	Overload current withstand capability 10 s		A	344	504	528
	Maximum back-up fuse for short-circuit protection gL and gG: coordination type 2		A	80 (125 [1])	125	125
	Rated insulation voltage	U_i	V	1000		
	Rated impulse withstand voltage	U_{imp}	kV	6		
	Rated operational voltage	U_e	V	1000		
	Rated frequency	f	Hz	50/60		
	Thermal current	I_{th}	A	75 (85 [1])	85 (100 [1])	100
	Rated operational current for AC-1, AC-7a and AC-21	I_e	A	75 (85 [1])	85 (100 [1])	100
	Operational power for AC-1, AC-7a and AC-21:					
	single-phase 230 V	P_e	kW	16 (19 [1])	19 (22 [1])	22
	three-phase 230 V	P_e	kW	28 (32 [1])	32 (38 [1])	38
	three-phase 400 V	P_e	kW	50 (56 [1])	56 (66 [1])	66
	Maximum operating frequency for AC-1, AC-7a and AC-21		op. c./h	600		
	Electrical endurance for AC-1, AC-7a and AC-21		op. c.	200.000		
	Rated operational current for AC-3, AC-3e, AC-7b and AC-23 (at 400 V)	I_e	A	43	63	70
	Operational power for AC-3, AC-3e, AC-7b and AC-23:					
	single-phase 230 V	P_e	kW	5.5	7.5	9
	three-phase 230 V	P_e	kW	12.5	15	18.5
	three-phase 400 V	P_e	kW	22	30	37
	three-phase 500 V	P_e	kW	30	40	45
	three-phase 690 V	P_e	kW	30	40	45
	three-phase 1000 V	P_e	kW	22	30	30
	Maximum operating frequency for AC-3, AC-3e, AC-7b and AC-23		op. c./h	600		
	Electrical endurance for AC-3, AC-3e, AC-7b and AC-23		op. c.	800.000	400.000	400.000
	Rated operational current for AC-4 (at 400 V)	I_e	A	29	41	41
	Operational power for AC-4:					
	three-phase 400 V	P_e	kW	15	22	22
	three-phase 500 V	P_e	kW	18.5	25	25
	Maximum operating frequency for AC-4		op. c./h	300		
	Electrical endurance for AC-4		op. c.	40.000	20.000	20.000
	Rated motor power according to standards UL and CSA:					
	single-phase 120 V	P_e	HP	3	5	5
	single-phase 240 V	P_e	HP	7.5	10	10
	three-phase 240 V	P_e	HP	15	20	25
	three-phase 480 V	P_e	HP	25	30	40
	three-phase 600 V	P_e	HP	30	40	50
	Maximum operating frequency for motors acc. to UL and CSA		op. c./h	600		
	Electrical endurance for motors acc. to UL and CSA		op. c.	800.000	400.000	400.000

[1] Ratings for KNL43/63UL version

	Type	Symbol	Unit	KNL43 KNL43UL	KNL63 KNL63UL	KNL75
MAIN CIRCUIT	Switching of capacitors AC-6b and AC-7c (at 230 V)	C	µF	440	660	770
	Maximum operating frequency for AC-6b and AC-7c		op. c./h		600	
	Electrical endurance for AC-6b and AC-7c		op. c.		100.000	
	Rated operational current for DC-1 (L/R ≤ 1 ms):	I_e	A			
	1 pole ... 24 V DC/ 48 V DC/ 60 V DC/ 110 V DC/ 220 V DC				50 / 50 / 50 / 8 / 6	
	2 poles in series ... 24 V DC/ 48 V DC/ 60 V DC/ 110 V DC/ 220 V DC				70 / 70 / 70 / 60 / 36	
	3 poles in series ... 24 V DC/ 48 V DC/ 60 V DC/ 110 V DC/ 220 V DC				70 / 70 / 70 / 60 / 50	
	Maximum operating frequency for DC-1		op. c./h		300	
	Terminal capacity:	S	mm^2			
	rigid (solid and stranded)				35	
	flexible				25	
	Length of removed wire insulation		mm		16	
	Screw				M6	
	Screw head				PZ2	
	Tightening torque		Nm		4	
AUXILIARY CIRCUIT	Maximum back-up fuse for short-circuit protection gL and gG: coordination type 2	I_v	A		10	
	Rated operational current for AC-15:	I_e	A			
	single-phase 230 V				6	
	single-phase 400 V				4	
	single-phase 500 V				2	
	single-phase 690 V				1	
	Maximum operating frequency for AC-15		op. c./h		1.200	
	Electrical endurance for AC-15		op. c.		1.000.000	
	Terminal capacity:		mm^2			
	rigid (solid and stranded)				1 ... 2.5	
	flexible				1 ... 2.5	
	Length of removed wire insulation		mm		10	
	Screw				M3.5	
	Screw head				PZ2	
	Tightening torque		Nm		0.8	
COIL	Range of control voltage for switch-on	U_c	%		85 ... 110	
	Range of control voltage for drop out	U_c	%		20 ... 75	
	Kind of voltage				AC	
	Standard control voltages	U_c	V		12 ... 500	
	Frequency of AC control voltage	f	Hz		50/60	
	Control mode				remote control with U_c	
	Coil consumption:		VA/W			
	switch-on				130/80	
	operation				10/3	
	Delays:		ms			
	make				10 ... 20	
	brake				8 ... 15	
	Terminal capacity:		mm^2			
	rigid (solid and stranded)				1 ... 2.5	
	flexible				1 ... 2.5	
	Length of removed wire insulation		mm		11	
	Screw				M3.5	
	Screw head				PZ2	
	Tightening torque		Nm		0.8	
SAFETY	MTTF - Mean time to failure	AC-1	h		5.000	
	MTTF = $1/\lambda$ = B10/(0.1 n_{op})	AC-3		20.000		10.000
	$MTTF_d$ - Mean time to failure dangerous	AC-1	h		6.666	
	MTTFd = $1/\lambda_d$ = $B10_d$/(0.1 n_{op})	AC-3		26.666		13.333
	B10 - Number of operating cycles until 10 % of devices fail	AC-1	op. c.		150.000	
		AC-3		600.000		300.000
	$B10_d$ - Number of operating cycles until 10 % of device dangerous	AC-1	op. c.		200.000	
	$B10_d$ = B10/ratio of dangerous failures	AC-3		800.000		400.000
	λ - Failure rate	AC-1	1/h		0.0002	
	λ = (0.1 n_{op})/B10	AC-3		0.00005		0.0001
	λ_d - Failure rate dangerous	AC-1	1/h		0.00015	
	λ_d = (0.1 n_{op})/$B10_d$	AC-3		0.00004		0.000075
	Ratio of dangerous failures		%		75	
	n_{op} - Operating cycles (operating cycles/h)		op. c./h		300	

Electrical endurance

Diagram 1
Electrical endurance of motor contactors KNL43 - KNL75, KNL43UL, KNL63UL – **AC-3, AC-3e**

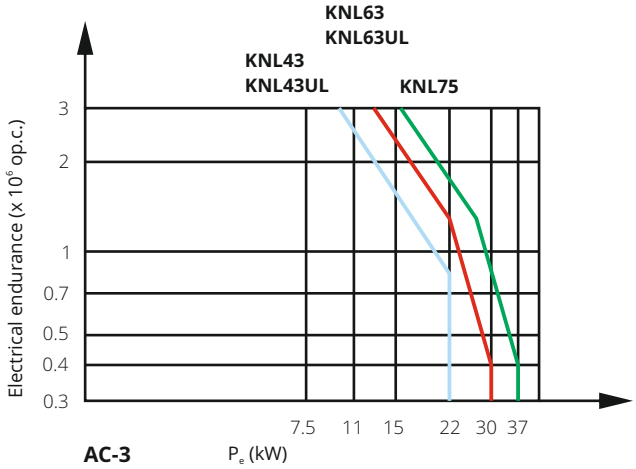

Diagram 2
Electrical endurance of motor contactors KNL43 - KNL75, KNL43UL, KNL63UL – **AC-4**

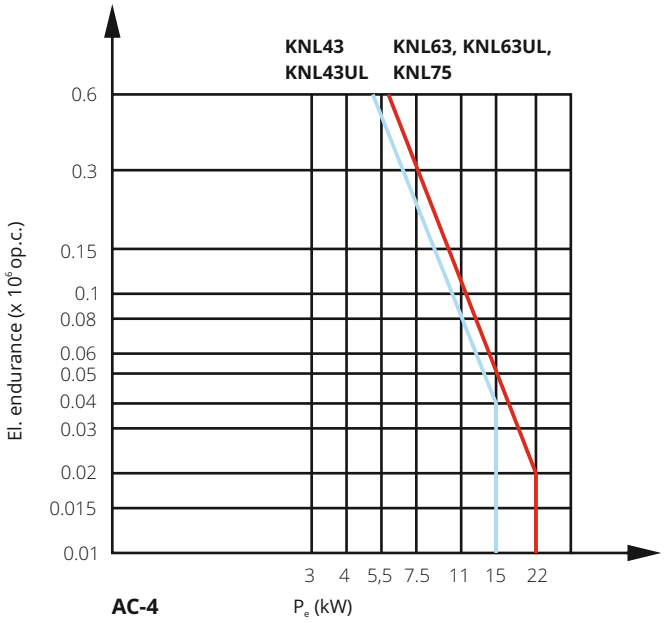

KNL43 - KNL75

Mounting positions of accessories

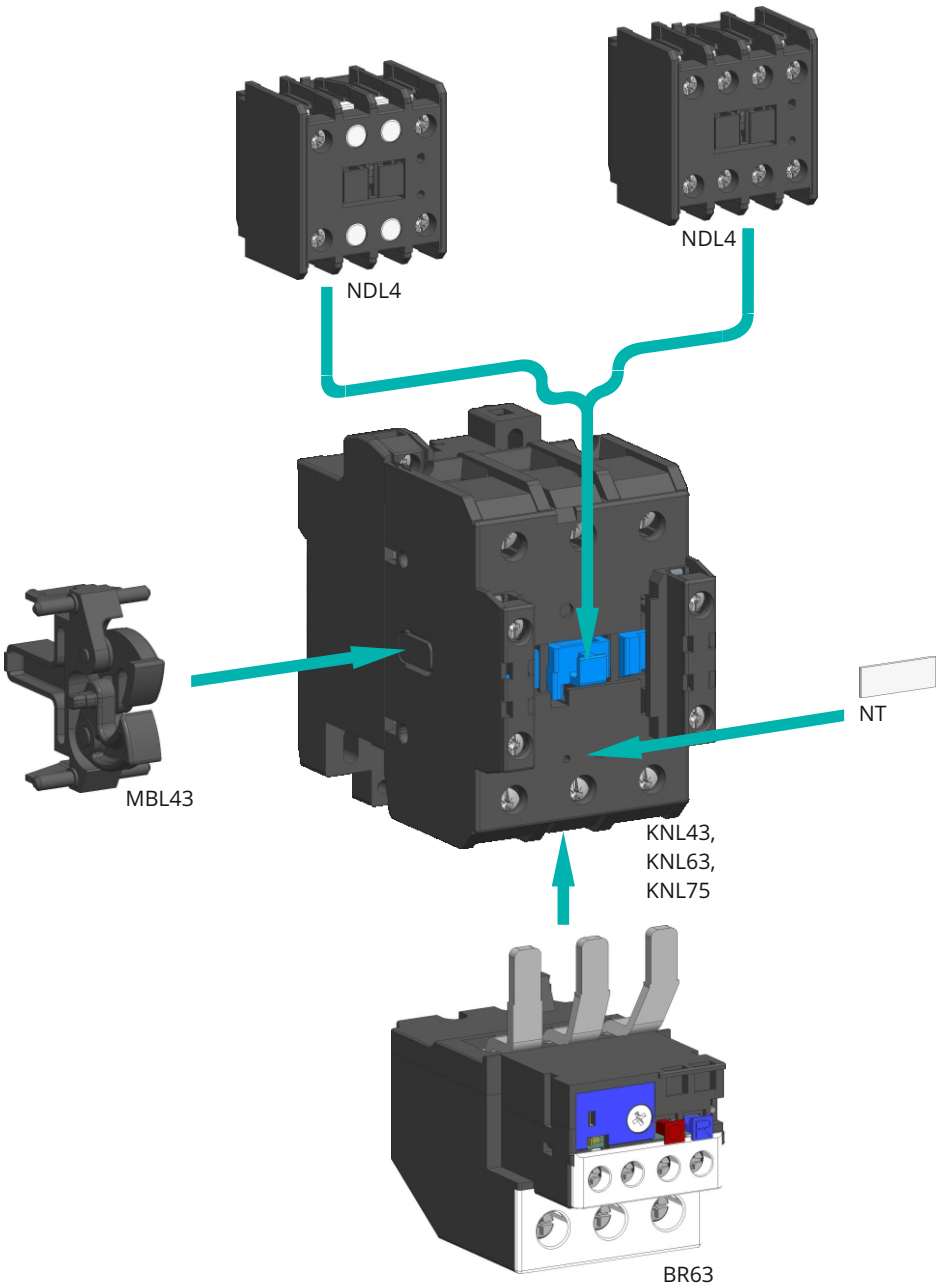

KNL43 - KNL75

Snap-on auxiliary switch blocks

	Type	Symbol	Unit	NDL4
GENERAL	Standards			IEC/EN 60947-5-1, VDE 0660, UL 508
	Approvals			CE, UL, CSA
	For use with			KNL43, KNL43UL, KNL63, KNL63UL, KNL75
	Module width			2
	Number of poles			2 or 4
	Degree of protection			IP20
	Pollution degree			3
	Ambient temperature			
	open		°C	-25 ... +55
	closed			-25 .... +45
	Storage temperature		°C	-30 ... +80
	Maximum altitude U_i and U_e is reduced for 1.2 % and I_e for 0.4 % for every additional 100 m		m	2000
	Maximum operating frequency with no load		op. c./h	3000
	Mechanical endurance		op. c.	10.000.000
	Weight		g	70
AUXILIARY CIRCUIT	Contact reliability			≥17 V; ≥50 mA
	Maximum back-up fuse for short-circuit protection gL and gG: coordination type 2			16
	Rated insulation voltage	U_i	V	690
	Rated impulse withstand voltage	U_{imp}	kV	6
	Rated operational voltage	U_e	V	690
	Rated frequency	f	Hz	50 /60
	Thermal current	I_{th}	A	16
	Rated operational current for AC-15:			
	single-phase 230 V	I_e	A	6
	single-phase 400 V			4
	single-phase 500 V			2
	single-phase 690 V			1
	Maximum operating frequency for AC-15		op. c./h	1.200
	Electrical endurance for AC-15		op. c.	500.000
	Switching of auxiliary loads acc. to standard UL and CSA			A600, N600
	Rated operational current for DC-13:			
	1 pole ... 24 V DC/ 60 V DC/ 110 V DC/ 220 V DC		A	10 / 4 /0.9 / 0.4
	Maximum operating frequency for DC-13		op. c./h	1.200
	Electrical endurance for DC-13		op. c.	500.000
	Terminal capacity:			
	rigid (solid and stranded)	S	mm^2	0.75 ... 4
	flexible			0.5 ... 2.5
	Length of removed wire insulation		mm	10
	Screw			M3.5
	Screw head			PZ2
	Tightening torque		Nm	1.4

KNL43 - KNL75

BR63 Thermal overload relay

	Type	Symbol	Unit	BR63
GENERAL	Standards			IEC 60947-4-1, IEC 60947-5-1, UL508
	Approvals			CE, UL
	For use with			KNL43, KNL43UL, KNL63, KNL63UL, KNL75
	Degree of protection			IP20
	Ambient temperature			
	operating		°C	-5 ... +55
	storage			-25 ... +70
	Dimensions (WxHxD)		mm	65 x 85.5 x 97.5
	Operating position			vertical
	Reset type			auto, manual
	Weight		g	350
MAIN CIRCUIT	Rated insulation voltage	U_i	V	690
	Rated impulse withstand voltage	U_{imp}	kV	6
	Rated operational voltage	U_e	V	690
	Adjustable current	I_r	A	17 ... 97
	Rated frequency	f	Hz	50/60
	Overvoltage category / pollution degree acc. to IEC/EN 60947-1			III / 3
	Trip class acc. to IEC/EN 60947-4-1			10
	Sensitivity to phase failure			yes
	Power loss at I_n	P	W	11 ... 15.5
	Terminal capacity		mm^2	6 ... 35
	Conductor insulation stripping length		mm	12
	Screw			M5
	Screw head			PZ2
	Tightening torque		Nm	2.5
AUXILIARY CIRCUITS	Rated insulation voltage	U_i	V	690
	Rated impulse withstand voltage	U_{imp}	kV	6
	Rated operational voltage	U_e	V	AC: 600 ; DC: 250
	Overvoltage category / pollution degree acc. to IEC/EN 60947-1			III / 3
	Thermal current (both contacts)	I_{th}	A	10
	Contact electrical rating			A600 / Q300
	Rated operational current AC-15			
	120 V	I_e	A	6
	240 V			3
	380 V both contacts			1.9
	480 V			1.5
	500 V			1.4
	600 V			1.2
	Rated operational current DC-13			
	125 V both contacts	I_e	A	0.55
	250 V			0.27
	Terminal capacity		mm^2	0.75 ... 2.5
	Conductor insulation stripping length		mm	8
	Screw			M3.5
	Screw head			PZ2
	Tightening torque		Nm	0.8

Connection diagram BR63

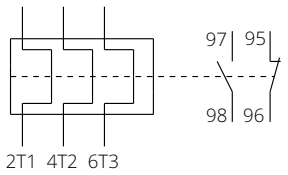

KNL43 - KNL75

BR63 THERMAL OVERLOAD RELAY

Setting ranges and maximum permitted back-up fuses

Seting range (A)	Max. back-up fuse gL/gG (A)
17 - 25	100
24.5 - 36	100
35 - 47	125
45 - 60	150
58 - 75	200
72 - 90	250
77 - 97	250

Tripping curve BR63

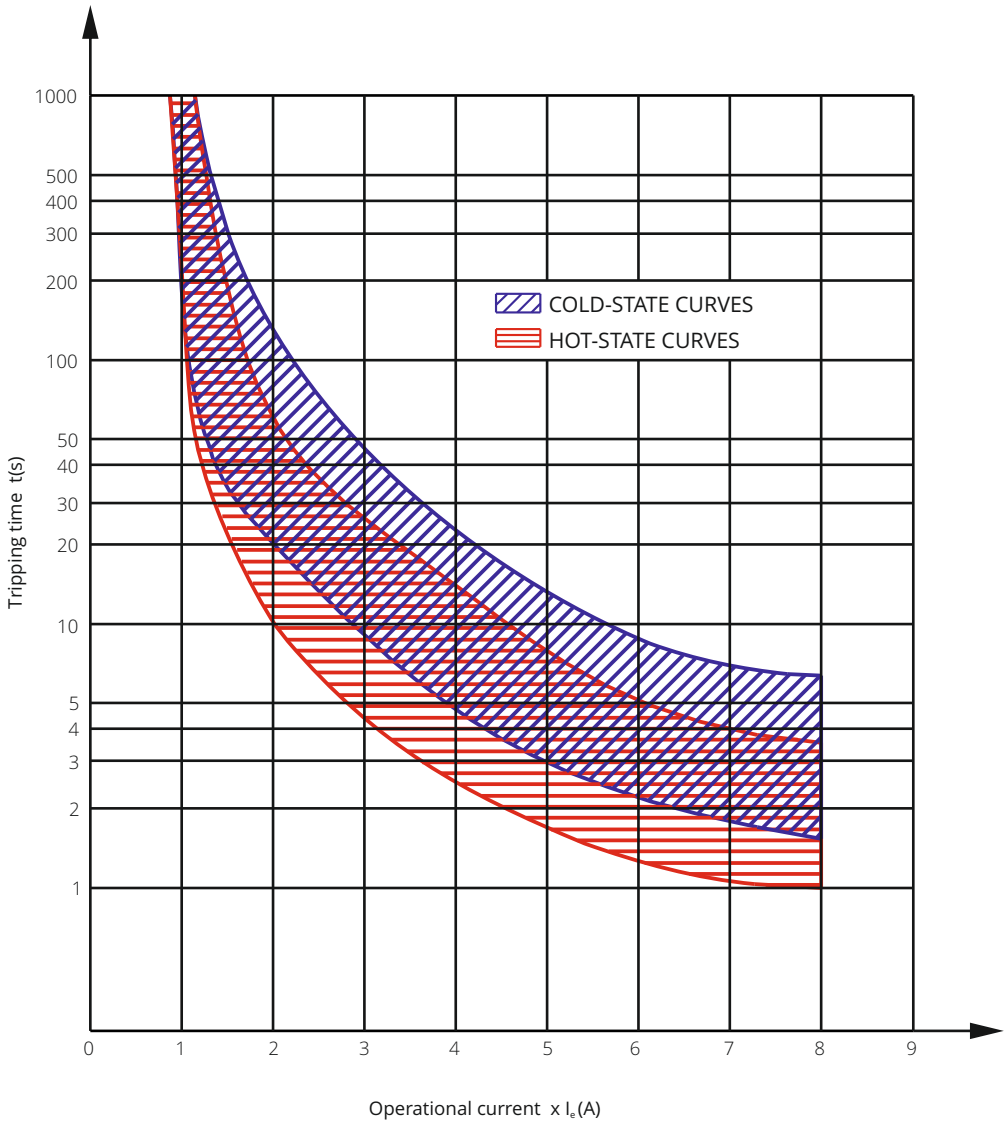

KNL43 ... KNL75
KNL43UL, KNL63UL

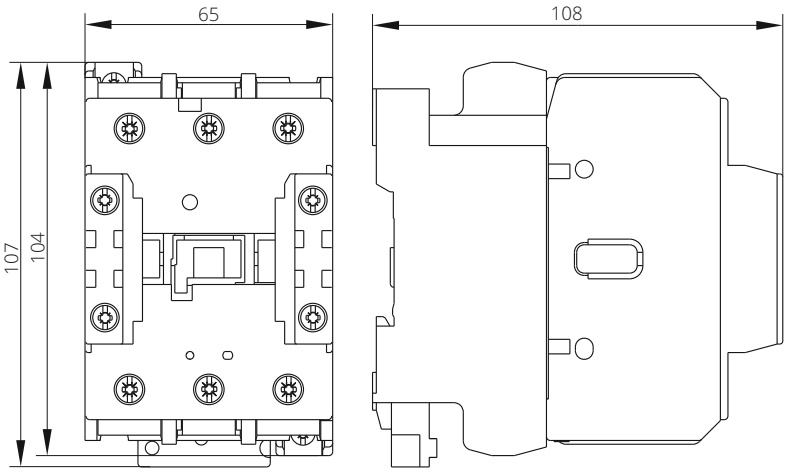

KNL43 ... KNL75 - drilling plan
KNL43UL, KNL63UL

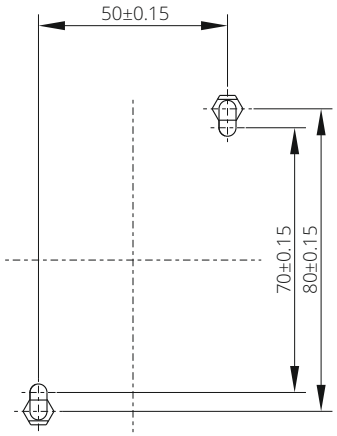

NDL4

Two and four-pole snap-on auxiliary switch blocks
(mounting on a basic contactor)

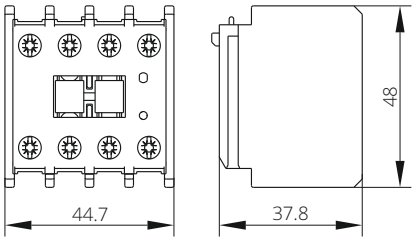

BR63 thermal overload relay

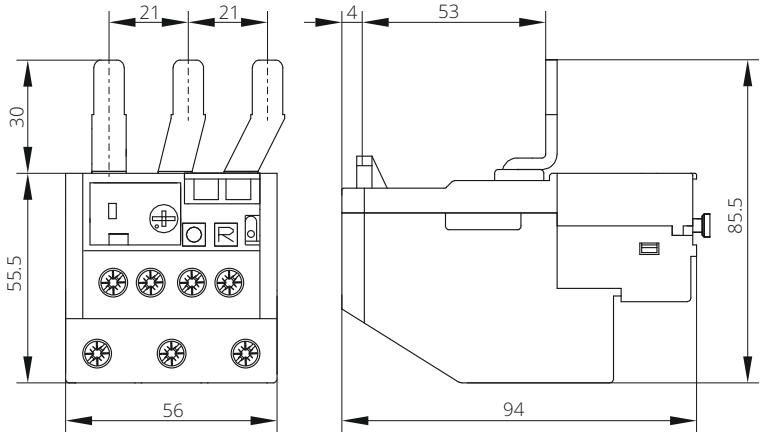

KNL43 ... KNL75 + BR63
KNL43UL + BR63, KNL63UL + BR63

Contactor + thermal overload relay

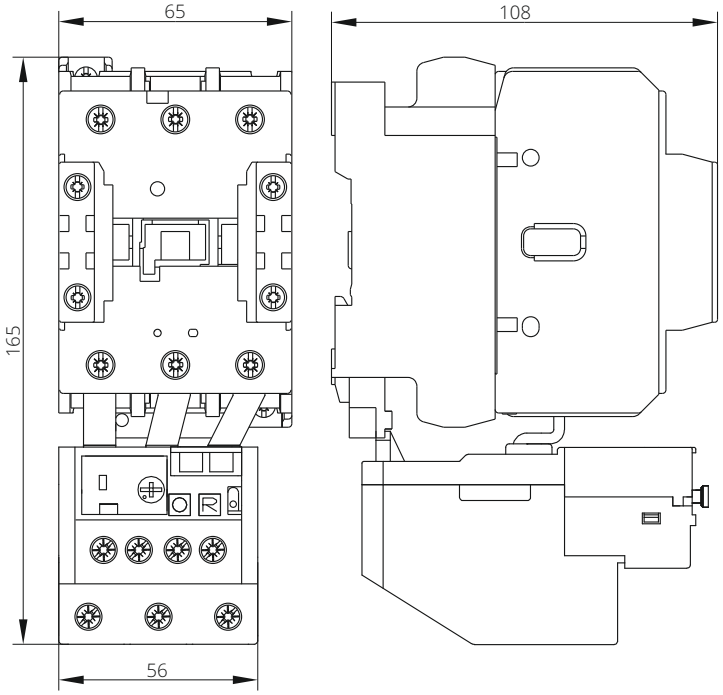

CONTACTORS ARE USED FOR SWITCHING ELECTRIC MOTORS AND OTHERRESISTIVE, INDUCTIVE AND CAPACITIVE LOADS (MILLS, FANS, LIFTINGEQUIPMENT, TRANSPORT SYSTEMS, PUMPS, SHIPYARDS, IRONWORKS, INDUSTRY, ETC.).

FOR UNIVERSAL SWITCHING:

- All kind of motors
- Electric heating
- Lights and lightning
- Capacitor
- Other eletrical loads

ADVANCED OPERATION:

- Control combinations

OTHER BENEFITS:

- High contact reliabillity at low voltages
- High electrical and mechanical endurance and high switching capacity
- Wide range of control voltages is avalible

ORDERING DATA

Contactors KNL95 - KNL1000 ..... page 1-68
Accessorries for contactors KNL95 - KNL1000 ..... page 1-70

Example for Ordering data ..... page 1-71
Technical characteristics ..... page 1-72
Dimensions ..... page 1-81

MOTOR CONTACTORS

AC-3 acc. to IEC/EN 60947-4-1 (3-pole, 120 mm widths)

AC/DC

Type	Rated current I_e	Control voltage 50/60 Hz	Wiring diagram	Ordering No.	Weight (kg)	Packaging (pcs)
KNL95-00	95 A	380 V	A1 1 3 5	30.050.055	5.1	1
KNL95-00	95 A	220 V		30.050.054	5.1	1
KNL95-00	95 A	24 V	A2 2 4 6	30.050.050	5.1	1

AC-3 acc. to IEC/EN 60947-4-1 (3-pole, 120 mm widths)

AC/DC

Type	Rated current I_e	Control voltage 50/60 Hz	Wiring diagram	Ordering No.	Weight (kg)	Packaging (pcs)
KNL115-00	110 A	380 V	A1 1 3 5	30.050.069	5.1	1
KNL115-00	110 A	220 V		30.050.068	5.1	1
KNL115-00	110 A	24 V	A2 2 4 6	30.050.064	5.1	1

AC-3 acc. to IEC/EN 60947-4-1 (3-pole, 120 mm widths)

AC/DC

Type	Rated current I_e	Control voltage 50/60 Hz	Wiring diagram	Ordering No.	Weight (kg)	Packaging (pcs)
KNL145-00	150 A	380 V	A1 1 3 5	30.050.083	5.22	1
KNL145-00	150 A	220 V		30.050.082	5.22	1
KNL145-00	150 A	24 V	A2 2 4 6	30.050.078	5.22	1

AC-3 acc. to IEC/EN 60947-4-1 (3-pole, 120 mm widths)

AC/DC

Type	Rated current I_e	Control voltage 50/60 Hz	Wiring diagram	Ordering No.	Weight (kg)	Packaging (pcs)
KNL180-00	185 A	380 V	A1 1 3 5	30.050.097	5.22	1
KNL180-00	185 A	220 V		30.050.096	5.22	1
KNL180-00	185 A	24 V	A2 2 4 6	30.050.092	5.22	1

AC-3 acc. to IEC/EN 60947-4-1 (3-pole, 145 mm widths)

AC/DC

Type	Rated current I_e	Control voltage 50/60 Hz	Wiring diagram	Ordering No.	Weight (kg)	Packaging (pcs)
KNL250-00	265 A	380 V	A1 1 3 5	30.050.111	9.1	1
KNL250-00	265 A	220 V		30.050.110	9.1	1
KNL250-00	265 A	24 V	A2 2 4 6	30.050.106	9.1	1

AC-3 acc. to IEC/EN 60947-4-1 (3-pole, 145 mm widths)

AC/DC

Type	Rated current I_e	Control voltage 50/60 Hz	Wiring diagram	Ordering No.	Weight (kg)	Packaging (pcs)
KNL400-00	420 A	380 V	A1 1 3 5	30.050.125	9.25	1
KNL400-00	420 A	220 V		30.050.124	9.25	1
KNL400-00	420 A	24 V	A2 2 4 6	30.050.120	9.25	1

MOTOR CONTACTORS

AC-3 acc. to IEC/EN 60947-4-1 (3-pole, 195 mm widths)

AC/DC

Type	Rated current I_e	Control voltage 50/60 Hz	Wiring diagram	Ordering No.	Weight (kg)	Packaging (pcs)
KNL500-00	520 A	380 V	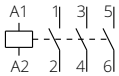	30.050.138	17.6	1
KNL500-00	520 A	220 V		30.050.137	17.6	1
KNL500-00	520 A	24 V		30.051.116	17.6	1

AC-3 acc. to IEC/EN 60947-4-1 (3-pole, 195 mm widths)

AC/DC

Type	Rated current I_e	Control voltage 50/60 Hz	Wiring diagram	Ordering No.	Weight (kg)	Packaging (pcs)
KNL630-00	630 A	380 V	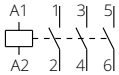	30.050.150	17.9	1
KNL630-00	630 A	220 V		30.050.149	17.9	1
KNL630-00	630 A	24 V		30.051.120	17.9	1

AC-3 acc. to IEC/EN 60947-4-1 (4-pole, 260 mm widths)

AC/DC

Type	Rated current I_e	Control voltage 50/60 Hz	Wiring diagram	Ordering No.	Weight (kg)	Packaging (pcs)
KNL1000.4-00	1000 A	380 V	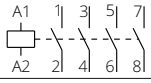	30.050.162	21.5	1
KNL1000.4-00	1000 A	220 V		30.050.161	21.5	1
KNL1000.4-00	1000 A	24 V		30.051.123	21.5	1

KNL95 - KNL1000

SNAP-ON AUXILIARY SWITCH BLOCKS

AC-15 acc. to IEC/EN 60947-5-1

Type	Rated current I_e	Rated voltage U_e	Version	Ordering No.	Weight (g)	Packaging (pcs)
G350 [1]	16 A	690 V	-12 or -21 reversible	38.422.650	67	1

[1] The add-on auxiliary contact block G350 can be applied to contactor KNL95-KNL1000 only up to a maximum of four pieces for each contactor, for a total of 12 contacts.
The contact block G350 provides a 2NO+1NC or 1NO+2NC combination depending on its mounting position.

Mechanical interlock

Type	Characteristic		Ordering No.	Weight (g)	Packaging (pcs)
G355	Side-by-side contactors		38.902.072	25	1
G356/1	One on top of other contactors L(mm)	225 - 365	38.902.073	104	1
G356/2		265 - 305	38.902.074	110	1
G356/3		305 - 345	38.902.075	116	1
G356/4		345 - 385	38.902.076	122	1
G356/5		390 - 425	38.902.077	124	1
G356/6		470 - 500	38.902.078	134	1

G355

Main terminal cover

Type	For contactors	Ordering No.	Weight (g)	Packaging (pcs)
G360	KNL95, KNL115	38.422.669	26	1
G361	KNL145, KNL180	38.422.677	26	1
G363	KNL250, KNL400	38.422.679	47	1
G527	KNL500	38.422.680	238	1
G528	KNL500.4	38.422.681	265	1
G529	KNL630	38.422.682	250	1
G530	KNL630.4	38.422.683	290	1

G363

Bars for 3 poles star connection

Type	For contactors	Ordering No.	Weight (g)	Packaging (pcs)
BA1595	KNL95 - KNL180	37.551.806	82	1
BA1721	KNL250 - KNL400	37.551.807	140	1
BA1846	KNL500 - KNL630	37.551.808	340	1

BA1595

Bars for 2 poles parallel connection

Type	For contactors	Ordering No.	Weight (g)	Packaging (pcs)
BA1594	KNL95 - KNL180	37.551.812	89	1
BA1720	KNL250 - KNL400	37.551.813	140	1
BA1845	KNL500 - KNL630	37.551.814	320	1

BA1595

Adapter for screw terminal

Type	Ordering No.	Weight (g)	Packaging (pcs)
G370	38.422.685	3	1

G370

Identification plate

Type	Ordering No.	Weight (g)	Packaging (pcs)
BA126/2	37.423.883	1	1

KNL95 - KNL1000

Thermal overload relay accessories

Type	Characteristic			Ordering No.	Weight (g)	Packaging (pcs)
G372	Adapter for mounting on contactor	BRA180	KNL95 - KNL180	37.551.817	82	1
G373			KNL250 - KNL400	37.551.818	100	1
G375		BRA400	KNL145 - KNL180	37.551.821	103	1
G376			KNL250 -KNL400	37.551.822	165	1
G228	Electric reset	all types		38.422.687	58	1
G223	Sealing kit	all types		38.423.476	2	1
G244	Start button	all types		38.422.269	11	1
RB6	Identification plate	all types		37.423.885	1	1

G376

BRA180 THERMAL OVERLOAD RELAY

Up to 200 A for KNL95 - KNL250 contactors

Type	Setting range (A)	Max. backup fuse (A) aM	gL/gG	Ordering No.	Weight (kg)	Packaging (pcs)
BRA180-100	60 ... 100	100	160	30.016.895	2.15	1
BRA180-125	75 ... 125	125	200	30.016.896		
BRA180-150	90 ... 150	160	250	30.016.897		
BRA180-200	120 ... 200	200	315	30.016.898		

BRA400 THERMAL OVERLOAD RELAY

Up to 420 A for KNL145 - KNL400 contactors

Type	Setting range (A)	Max. backup fuse (A) aM	gL/gG	Ordering No.	Weight (kg)	Packaging (pcs)
BRA400-250	150 ... 250	250	400	30.016.908	2.46	1
BRA400-300	180 ... 300	315	500	30.016.909		
BRA400-420	250 ... 420	400	630	30.016.910		

ORDERING DATA

Standard control voltages and designations (AC)

for contactors KNL95 - KNL1000

V (50/60 Hz)	24	48	60	110/125	220/240	380/415	440/480

KNL95 – 00 – 220/240 – 50/60

- 50/60 – Frequency
- 220/240 – Control voltage
- 00 – Version of contacts
- KNL95 – Type

NOTE:
The type designation and control voltage are stated when oredring the contactors.

	Type	Symbol	Unit	KNL95	KNL115	KNL145	KNL180
GENERAL	Standards			IEC 60947-4-1, UL 508			
	Approvals			CE, UL, EAC			
	Module width		mm	3-pole: 120 / 4-pole: 160			
	Number of poles			3 or 4			
	Pollution degree			3			
	Ambient temperature:						
	open		°C	-50 ... +70			
	closed		°C	-50 ... +70			
	Storage temperature		°C	-60 ... +80			
	Maximum altitude U_i and U_e is reduced for 1.2 % and I_e for 0.4 % for every additional 100 m		m	2000			
	Number of contactors or switches side-by-side: ≤40 °C (40 ... 55) °C			no limitation			
	Maximum operating frequency with no load		op. c./h	2.400			
	Mechanical endurance		op. c.	10.000.000			
	Weight		kg	5.96	5.96	6.1	10.6
MAIN CIRCUIT	Power dissipation per pole		W	7	7.7	14.5	20.3
	Overload current withstand capability 10 s		A	760	1100	1300	1500
	Maximum back-up fuse for short-circuit protection gL and gG: coordination type 2		A	160	200	250	315
	Rated insulation voltage	U_i	V	1000			
	Rated impulse withstand voltage	U_{imp}	kV	8			
	Rated operational voltage	U_e	V	690			
	Rated frequency	f	Hz	50/60			
	Thermal current	I_{th}	A	125	160	250	275
	Rated operational current for AC-1, AC-7a and AC-21	I_e	A	125	160	250	275
	Operational power for AC-1, AC-7a and AC-21: single-phase 230 V	P_e	kW	27	35	55	60
	three-phase 230 V	P_e	kW	47	57	91	95
	three-phase 400 V	P_e	kW	82	98	150	160
	three-phase 500 V	P_e	kW	103	129	196	213
	three-phase 690 V	P_e	kW	142	173	270	298
	Maximum operating frequency for AC-1, AC-7a and AC-21		op. c./h	600			
	Rated operational current for AC-3, AC-7b and AC-23 (at 400 V)	I_e	A	95	110	150	185
	Operational power for AC-3, AC-7b and AC-23:						
	three-phase 230 V	P_e	kW	27.6	33	46	57
	three-phase 400 V	P_e	kW	50	61	80	100
	three-phase 500 V	P_e	kW	56	80	100	123
	three-phase 690 V	P_e	kW	74	100	120	144
	three-phase 1000 V	P_e	kW	46	63	75	103
	Maximum operating frequency for AC-3, AC-7b and AC-23		op. c./h	600			
	Electrical endurance for AC-3, AC-7b and AC-23		op. c.	1.100.000	1.100.000	1.100.000	1.000.000
	Rated operational current for AC-4 (at 400 V)	I_e	A	43	47	57	65
	Operational power for AC-4: three-phase 400 V	P_e	kW	23	25	31	36
	Maximum operating frequency for AC-4		op. c./h	300			
	Electrical endurance for AC-4		op. c.	200.000			
	Rated motor power according to standards UL and CSA:						
	three-phase 230 V	P_e	HP	30	40	50	75
	three-phase 460 V	P_e	HP	50	75	100	150
	three-phase 575 V	P_e	HP	75	100	125	150
	Maximum operating frequency for motors acc. to UL and CSA		op. c./h	600			
	Electrical endurance for motors acc. to UL and CSA		op. c.	1.100.000	1.100.000	1.100.000	1.000.000

	Type	Symbol	Unit	KNL95	KNL115	KNL145	KNL180
MAIN CIRCUIT	Switching of capacitors AC-6b and AC-7c (at 230 V)	C	µF	900	1800	2400	2400
	Maximum operating frequency for AC-6b and AC-7c		op. c./h	600			
	Switching of capacitors AC-6b and AC-7c (at 230 V)		op. c.	100.000			
	Rated operational current for DC-1 (L/R ≤ 1 ms):	I_e	A				
	1 pole ... 24 V DC/ 110 V DC/ 220 V DC			70 / 8 / 6	160 / 100 / -	220 / 110 / -	260 / 120 / -
	2 poles in series ... 24 V DC/ 110 V DC/ 220 V DC			100 / 80 / 40	160 / 130 / 130	220 / 150 / 150	260 / 170 / 150
	3 poles in series ... 24 V DC/ 110 V DC/ 220 V DC			100 / 85 / 55	160 / 130 / 130	220 / 150 / 150	260 / 170 / 170
	Maximum operating frequency for DC-1		op. c./h	300			
	Rated operational current for DC-3 (L/R ≤ 2 ms):	I_e	A				
	1 pole ... 24 V DC/ 110 V DC/ 220 V DC			40 / 3 / 1	140 / 70 / -	160 / 80 / -	180 / 90 / -
	2 poles in series ... 24 V DC/ 110 V DC/ 220 V DC			60 / 40 / 7	140 / 100 / 80	160 / 120 / 90	180 / 250 / 100
	3 poles in series ... 24 V DC/ 110 V DC/ 220 V DC			80 / 60 / 35	140 / 120 / 100	160 / 140 / 120	180 / 160 / 140
	Maximum operating frequency for DC-1		op. c./h	300			
	Rated operational current for DC-5 (L/R ≤ 7.5 ms):	I_e	A				
	1 pole ... 24 V DC/ 110 V DC/ 220 V DC			40 / 3 / 1	140 / 80 / -	160 / 80 / -	180 / 90 / -
	2 poles in series ... 24 V DC/ 110 V DC/ 220 V DC			60 / 40 / 7	140 / 100 / 80	160 / 120 / 90	180 / 140 / 100
	3 poles in series ... 24 V DC/ 110 V DC/ 220 V DC			80 / 60 / 35	140 / 120 / 100	160 / 140 / 120	180 / 160 / 140
	Maximum operating frequency for DC-1		op. c./h	300			
	Terminal capacity:	S					
	wire with lug		mm^2	70	70	120	150
	1 or 2 bars		mm	20x3	20x3	25x3	25x3
	Screw			M6	M6	M8	M8
	Spanner / wrench size		mm	10	10	13	13
	Tightening torque		Nm	3	3	6	6
COIL	Range of control voltage for switch-on	U_c	%	80 ... 110			
	Range of control voltage for drop out	U_c	%	30 ... 60			
	Kind of voltage			AC/DC			
	Standard control voltages	U_c	V	24, 48, 60, 110/125, 220/240, 380/415, 440/480			
	Frequency of AC control voltage	f	Hz	50/60			
	Control mode			remote control with U_c			
	Surge immunity withstand voltage 1,2/50 µs acc. to standard IEC/EN 61000-4-5		kV	10			
	Coil consumption:		VA/W				
	switch-on			300/300			
	operation			10/10			
	Delays:	AC/DC	ms				
	make			13-25/60-90	60-100		
	brake			8-12	25-60		
	Terminal capacity: Quick-connect		faston	1x6.35 mm or 2x2.8 mm			
SAFETY	MTTF - Mean time to failure	AC-1	h	25.000	25.000	20.000	20.000
	MTTF = 1/λ = B10/(0.1 n_{op})	AC-3		27.500	27.500	27.500	25.000
	$MTTF_d$ - Mean time to failure dangerous	AC-1	h	33.333	33.333	26.666	26.666
	MTTFd = 1/λ_d = $B10_d$/(0.1 n_{op})	AC-3		36.666	36.666	36.666	33.333
	B10 - Number of operating cycles until 10 % of devices fail	AC-1	op. c.	750.000	750.000	600.000	600.000
		AC-3		825.000	825.000	825.000	750.000
	$B10_d$ - Number of operating cycles until 10 % of device dangerous	AC-1	op. c.	1.000.000	1.000.000	800.000	800.000
	$B10_d$ = B10/ratio of dangerous failures	AC-3		1.100.000	1.100.000	1.100.000	1.000.000
	λ - Failure rate	AC-1	1/h	0.00004	0.00004	0.00005	0.00005
	λ = (0.1 n_{op})/B10	AC-3		0.00004	0.00004	0.00004	0.00004
	λ_d - Failure rate dangerous	AC-1	1/h	0.00003	0.00003	0.00004	0.00004
	λ_d = (0.1 n_{op})/$B10_d$	AC-3		0.000003	0.000003	0.000003	0.000003
	Ratio of dangerous failures		%	75			
	n_{op} - Operating cycles (operating cycles/h)		op. c./h	300			

	Type	Symbol	Unit	KNL250	KNL400	KNL500	KNL630	KNL1000
GENERAL	Standards			IEC 60947-4-1, UL 508				
	Approvals			CE, UL, EAC				
	Module width		mm	3-pole: 145 / 4-pole: 192.5		3-pole: 192 / 4-pole: 257		
	Number of poles			3 or 4				
	Pollution degree			3				
	Ambient temperature:							
	open		°C	-50 ... +70				
	closed		°C	-50 ... +70				
	Storage temperature		°C	-60 ... +80				
	Maximum altitude U_i and U_e is reduced for 1.2 % and I_e for 0.4 % for every additional 100 m		m	2000				
	Number of contactors or switches side-by-side: ≤40 °C (40 ... 55) °C			no limitation				
	Maximum operating frequency with no load		op. c./h	2.400				
	Mechanical endurance		op. c.	10.000.000				
	Weight		kg	10.8	10.8	20.8	21.5	25.6
MAIN CIRCUIT	Power dissipation per pole		W	24.5	52	68.6	90	140
	Overload current withstand capability 10 s		A	2200	3600	4050	5040	5600
	Maximum back-up fuse for short-circuit protection gL and gG: coordination type 2		A	400	630	800	1000	/
	Rated insulation voltage	U_i	V	1000				
	Rated impulse withstand voltage	U_{imp}	kV	8				
	Rated operational voltage	U_e	V	690				
	Rated frequency	f	Hz	50/60				
	Thermal current	I_{th}	A	350	550	700	800	1000
	Rated operational current for AC-1, AC-7a and AC-21	I_e	A	350	550	700	800	1000
	Operational power for AC-1, AC-7a and AC-21: single-phase 230 V	P_e	kW	76	120	153	175	218
	three-phase 230 V	P_e	kW	124	200	252	288	350
	three-phase 400 V	P_e	kW	214	345	438	500	600
	three-phase 500 V	P_e	kW	282	452	575	655	750
	three-phase 690 V	P_e	kW	380	598	755	860	1000
	Maximum operating frequency for AC-1, AC-7a and AC-21		op. c./h	600				
	Rated operational current for AC-3, AC-7b and AC-23 (at 400 V)	I_e	A	265	420	520	630	/
	Operational power for AC-3, AC-7b and AC-23:							
	three-phase 230 V	P_e	kW	83	130	156	198	/
	three-phase 400 V	P_e	kW	140	225	290	335	/
	three-phase 500 V	P_e	kW	176	271	367	368	/
	three-phase 690 V	P_e	kW	212	352	416	440	/
	three-phase 1000 V	P_e	kW	156	208	312	368	/
	Maximum operating frequency for AC-3, AC-7b and AC-23		op. c./h	600				
	Electrical endurance for AC-3, AC-7b and AC-23		op. c.	1.100.000	700.000	700.000	700.000	/
	Rated operational current for AC-4 (at 400 V)	I_e	A	92	133	175	210	/
	Operational power for AC-4: three-phase 400 V	P_e	kW	52	76	99	119	/
	Maximum operating frequency for AC-4		op. c./h	300				
	Electrical endurance for AC-4		op. c.	200.000				/
	Rated motor power according to standards UL and CSA: three-phase 230 V	P_e	HP	100	150	200 [1]	250 [1]	
	three-phase 460 V	P_e	HP	200	350	400 [1]	500 [1]	
	three-phase 575 V	P_e	HP	250	400	450 [1]	500 [1]	
	Maximum operating frequency for motors acc. to UL and CSA		op. c./h	600				
	Electrical endurance for motors acc. to UL and CSA		op. c.	1.100.000	700.000	700.000	700.000	

[1] No UL/CSA ratings; data only for indication and reference purposes only

	Type	Symbol	Unit	KNL250	KNL400	KNL500	KNL630	KNL1000
MAIN CIRCUIT	Rated operational current for DC-1 (L/R ≤ 1 ms):	I_e	A					
	1 pole ... 24 V DC/ 110 V DC/ 220 V DC			350 / - / -	400 / 250 / -	650 / 320 / -	800 / 460 / -	/
	2 poles in series ... 24 V DC/ 110 V DC/ 220 V DC			350 / 300 / 250	400 / 400 / 350	650 / 550 / 450	800 / 800 / 700	/
	3 poles in series ... 24 V DC/ 110 V DC/ 220 V DC			350 / 300 / 300	400 / 400 / 400	650 / 600 / 600	800 / 800 / 800	/
	Maximum operating frequency for DC-1		op. c./h			300		
	Rated operational current for DC-3 (L/R ≤ 2 ms):	I_e	A					
	1 pole ... 24 V DC/ 110 V DC/ 220 V DC			180 / 150 / -	350 / 200 / -	550 / 320 / -	800 / 460 / -	/
	2 poles in series ... 24 V DC/ 110 V DC/ 220 V DC			280 / 250 / 200	350 / 350 / 280	650 / 550 / 450	800 / 800 / 700	/
	3 poles in series ... 24 V DC/ 110 V DC/ 220 V DC			180 /280 / 250	350 / 350 / 350	650 / 550 / 550	800 / 800 / 800	/
	Maximum operating frequency for DC-1		op. c./h			300		
	Rated operational current for DC-5 (L/R ≤ 7.5 ms):	I_e	A					
	1 pole ... 24 V DC/ 110 V DC/ 220 V DC			180 / 150 / -	350 / 200 / -	550 / 320 / -	800 / 460 / -	/
	2 poles in series ... 24 V DC/ 110 V DC/ 220 V DC			280 / 250 / 200	350 / 350 / 280	650 / 550 / 450	800 / 800 / 700	/
	3 poles in series ... 24 V DC/ 110 V DC/ 220 V DC			180 / 280 / 250	350 / 350 / 350	650 / 550 / 550	800 / 800 / 800	/
	Maximum operating frequency for DC-1		op. c./h			300		
	Terminal capacity:							
	wire with lug	S	mm^2	240	2x150	2x240	2x240	/
	1 or 2 bars		mm	30x4	30x5	50x5	60x5	60x5
	Screw			M10	M10	M10	M12	M12
	Screw head		mm	17	17	17	19	19
	Tightening torque		Nm	10	10	10	14	14
COIL	Range of control voltage for switch-on	U_c	%	80 ... 110				
	Range of control voltage for drop out	U_c	%	30 ... 60				
	Kind of voltage			AC/DC				
	Standard control voltages	U_c	V	1)		2)		
	Frequency of AC control voltage	f	Hz	50/60				
	Control mode			remote control with U_c				
	Surge immunity withstand voltage 1,2/50 µs acc. to standard IEC/EN 61000-4-5		kV	10				
	Coil consumption:							
	switch-on		VA/W	300/300		400/400		
	operation			10/10		18/18		
	Delays:							
	make		ms	80-120		110-180		
	brake			30-75		60-100		
	Terminal capacity: Quick-connect		faston	1x6.35 mm or 2x2.8 mm				
SAFETY	MTTF - Mean time to failure	AC-1	h	17.500	15.000	16.250	17.500	/
	MTTF = 1/λ = B10/(0.1 n_{op})	AC-3		25.000	17.500	17.500	17.500	/
	$MTTF_d$ - Mean time to failure dangerous	AC-1	h	23.333	20.000	21.666	23.333	/
	MTTFd = 1/λ_d = $B10_d$/(0.1 n_{op})	AC-3		33.333	23.333	23.333	23.333	/
	B10 - Number of operating cycles until 10 % of devices fail	AC-1	op. c.	525.000	450.000	487.500	525.000	/
		AC-3		750.000	525.000	525.000	525.000	/
	$B10_d$ - Number of operating cycles until 10 % of device dangerous	AC-1	op. c.	700.000	600.000	650.000	700.000	/
	$B10_d$ = B10/ratio of dangerous failures	AC-3		1.000.000	700.000	700.000	700.000	/
	λ - Failure rate	AC-1	1/h	0.00006	0.00007	0.00006	0.00006	/
	λ = (0.1 n_{op})/B10	AC-3		0.00004	0.00006	0.00006	0.00006	/
	λ_d - Failure rate dangerous	AC-1	1/h	0.00004	0.00005	0.00005	0.00004	/
	λ_d = (0.1 n_{op})/$B10_d$	AC-3		0.00003	0.00004	0.00004	0.00004	/
	Ratio of dangerous failures		%	75				/
	n_{op} - Operating cycles (operating cycles/h)		op. c./h	300				/

1) 24,48,60,110/125,220/240,380/415,440/480V **2)** 48,60,110/125,220/240,380/415,440/480 V

Electrical endurance

Diagram 1
Electrical endurance of motor contactors KNL95 - KNL1000 – AC-3

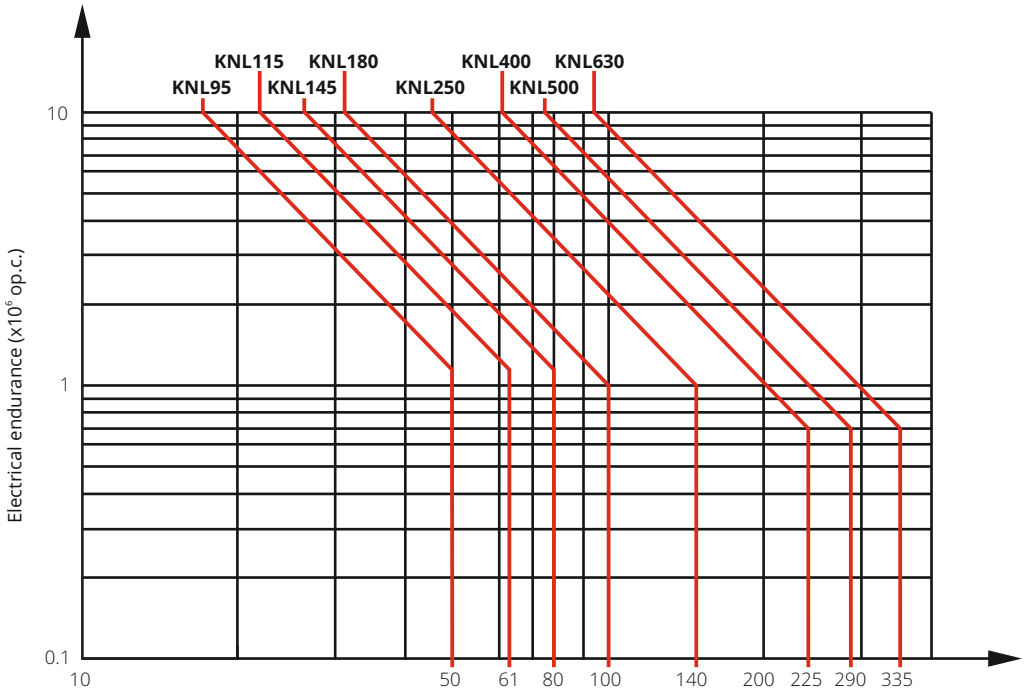

AC-3 Motor rated power (kW) at 400 V, 50 Hz
Operation frequency: 600 op.c./h

KNL95 - KNL1000

Mounting positions of accessories

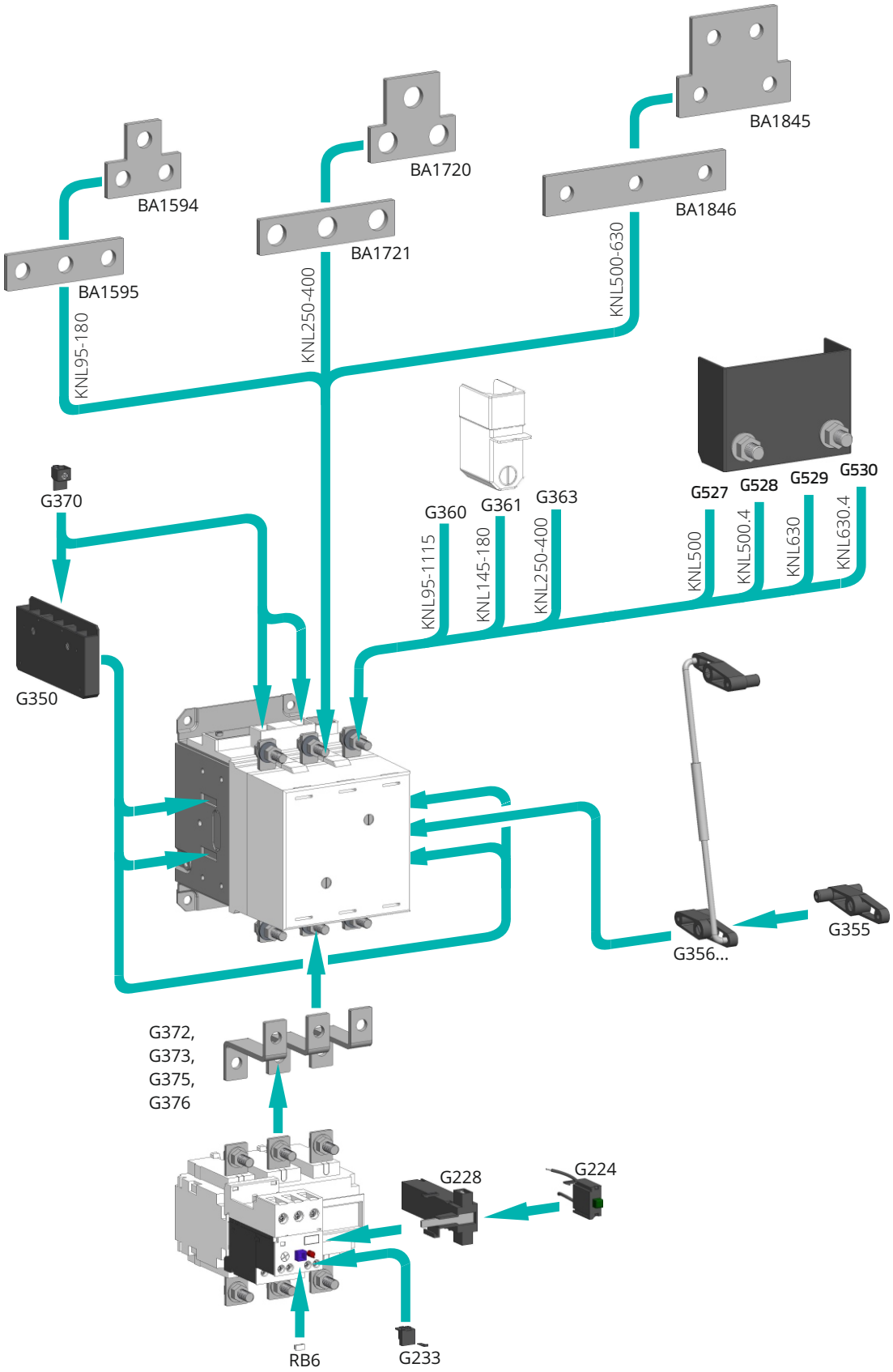

KNL95 - KNL1000

Snap-on auxiliary switch blocks

	Type	Symbol	Unit	G350
GENERAL	Standards			IEC/EN 60947-5-1, UL 508
	Approvals			CE, UL, CSA, GOST, CCC
	For use with			KNL95 ... KNL1000
	Module width			0.5
	Number of poles			3
	Degree of protection			IP20
	Pollution degree			3
	Ambient temperature			
	open		°C	
	closed			-50 .... +70
	Storage temperature		°C	-60 ... +80
	Mechanical endurance		op. c.	5.000.000
	Weight		g	80
AUXILIARY CIRCUIT	Maximum back-up fuse for short-circuit protection gL and gG: coordination type 2		A	16
	Rated insulation voltage	U_i	V	690
	Thermal current	I_{th}	A	16
	Switching of auxiliary loads acc. to standard UL and CSA			A600, P600
	Terminal capacity: Quick-connect		faston	1-6.35 mm or 2-2.8 mm

Mechanical interlock

Type	Characteristics
G355	Side-by-side contactors
	One on top of other contactors L (mm)
G356/1	225 - 365
G356/2	265 - 305
G356/3	305 - 345
G356/4	345 - 385
G356/5	390 - 425
G356/6	470 - 500

Main terminals cover

Type	Characteristics
G360	for KNL95, KNL115
G361	for KNL145, KNL180
G363	for KNL250, KNL400
G527	for KNL500
G528	for KNL500.4
G529	for KNL630
G530	for KNL630.4

Bars for 3-poles star connection

Type	Characteristics
BA1595	for KNL95 - KNL180
BA1721	for KNL250 - KNL400
BA1846	for KNL500 - KNL630

Bars for 2-poles parallel connection

Type	Characteristics
BA1594	for KNL95 - KNL180
BA1720	for KNL250 - KNL400
BA1845	for KNL500 - KNL630

Adapter

Type	Characteristics
BA1595	for KNL95 - KNL180

Identification plate

Type	Characteristics
BA126/2	for KNL95 - KNL630

KNL95 - KNL1000

BRA180, BRA400 Thermal overload relay

	Type	Symbol	Unit	BRA180	BRA400
GENERAL	Standards			IEC 60947-1, IEC 60947-4-1, UL508	
	Approvals			CE, UL, CSA, GOST	
	For use with			KNL95 ... KNL250	KNL145 ... KNL400
	Degree of protection			IP00 (main terminals) / IP20 (auxiliary terminals)	
	Ambient temperature operating storage		°C	-20 ... +55 -55 ... +70	
	Dimensions (WxHxD)		mm	127.5 x 137 x 171.5	145 x 146 x 171
	Operating position			vertical	
	Reset type			auto, manual	
	Maximum altitude above sea level		m	3000	
	Weight		kg	2.15	2.46
MAIN CIRCUIT	Rated insulation voltage	U_i	V	1000	
	Rated impulse withstand voltage	U_{imp}	kV	8	
	Rated operational voltage	U_e	V	690	
	Adjustable current	I_r	A	60 ... 200	150 ... 420
	Rated frequency	f	Hz	50/60	
	Overvoltage category / pollution degree acc. to IEC/EN 60947-1			III / 3	
	Trip class acc. to IEC/EN 60947-4-1			10	
	Sensitivity to phase failure			yes	
	Temperature compensation range		°C	-15 ... +55	
	Power loss at I_n	P	W	2.1 ... 7.2	
	Terminal capacity		mm^2	150 (with cable lug) ; 20 mm busbar	150 (with cable lug) ; 25 mm busbar
	Conductor insulation stripping length		mm	/	
	Screw			M8	M10
	Screw head			screw + hexagonal nut	
	Tightening torque		Nm	18	35
AUXILIARY CIRCUITS	Rated insulation voltage	U_i	V	690	
	Rated impulse withstand voltage	U_{imp}	kV	6	
	Rated operational voltage	U_e	V	690	
	Overvoltage category / pollution degree acc. to IEC/EN 60947-1			III / 3	
	Thermal current (both contacts)	I_{th}	A	10	
	Contact electrical rating			B600 / P600	
	Rated operational current AC-15 220/230 V both contacts	I_e	A	2.5	
	Rated operational current DC-13 110 V both contacts	I_e	A	1.1	
	Terminal capacity		mm^2	max. 2.5	
	Conductor insulation stripping length		mm	9	
	Screw			M3.5	
	Screw head			PH1	
	Tightening torque		Nm	1	

KNL95 - KNL1000

BRA180 THERMAL OVERLOAD RELAY

Setting ranges and maximum permitted back-up fuses

Seting range (A)	Max. back-up fuse gL/gG (A) aM	gL/gG
60 - 100	100	160
75 - 125	125	200
90 - 150	160	250
120 - 200	200	315

BRA400 THERMAL OVERLOAD RELAY

Setting ranges and maximum permitted back-up fuses

Seting range (A)	Max. back-up fuse gL/gG (A) aM	gL/gG
150 - 250	250	400
180 - 300	315	500
250 - 420	400	630

Tripping curve

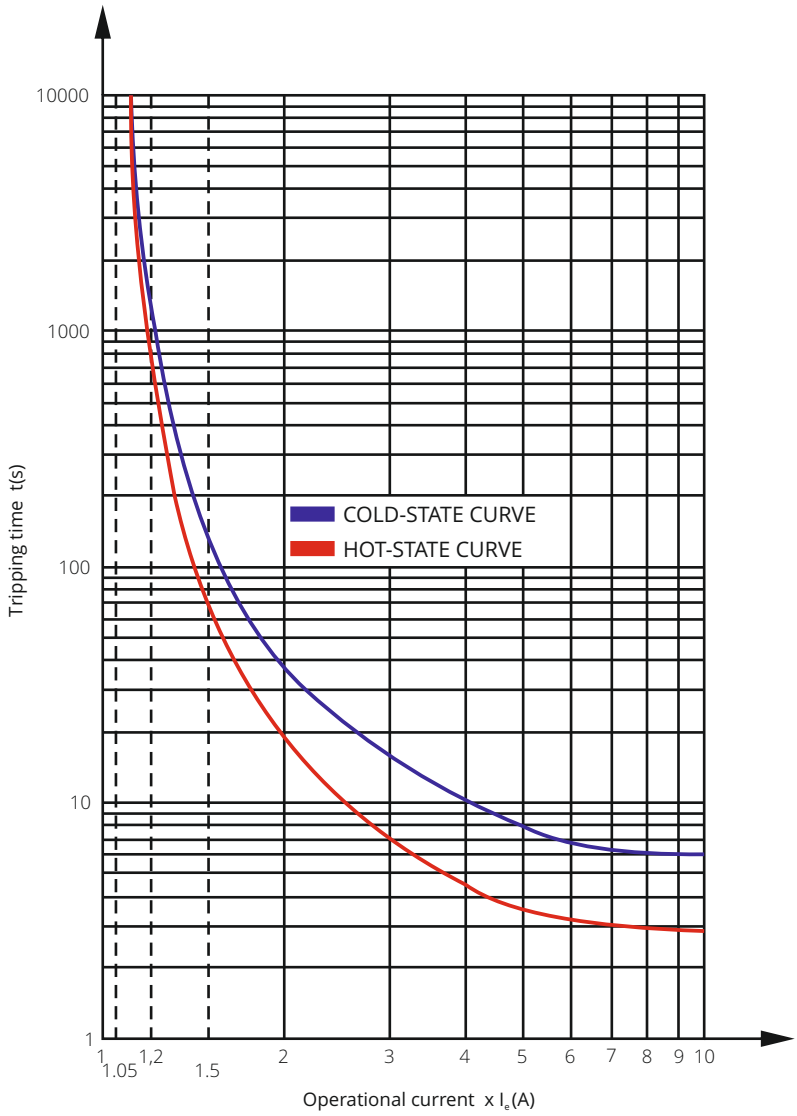

KNL95 ... KNL180 – 3-pole
Contactor + thermal overload relay BRA180

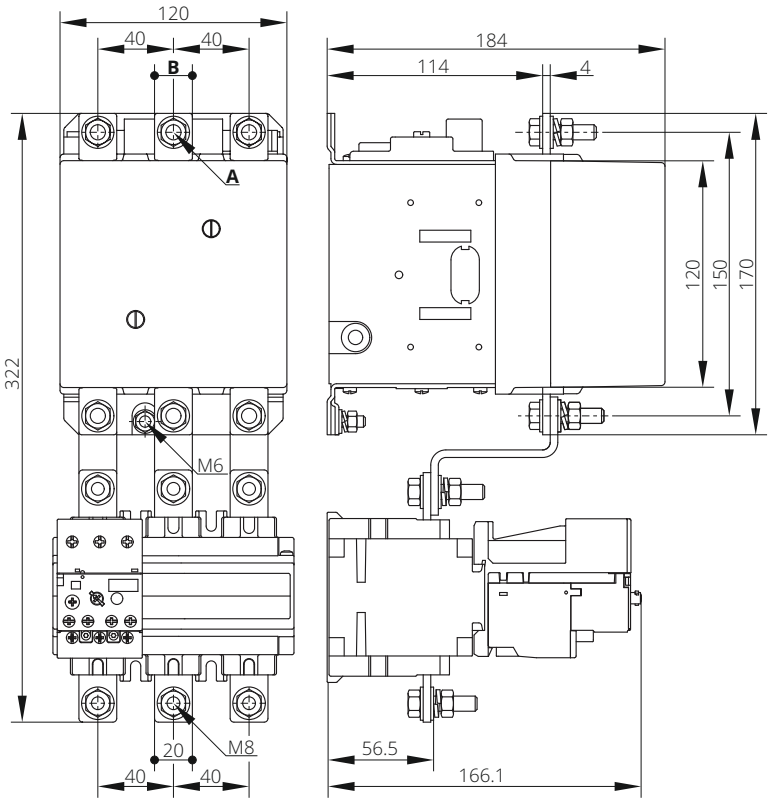

KNL95 ... KNL180 - drilling plan
3-pole

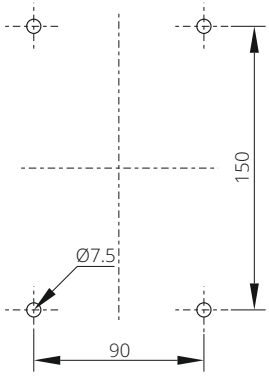

Type	A	B
KNL95, KNL115	M6	15
KNL145	M8	20
KNL180	M8	20

KNL95 ... KNL180 – 4-pole

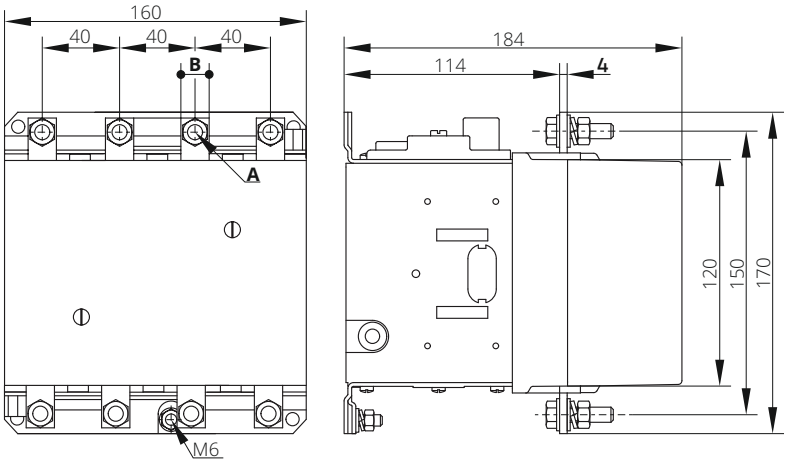

Type	A	B
KNL95, KNL115	M6	15
KNL145	M8	20
KNL180	M8	20

KNL95 ... KNL180 - drilling plan
4-pole

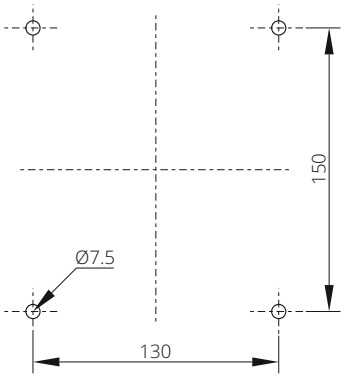

KNL250, KNL400 – 3-pole
Contactor + thermal overload relay BRA400

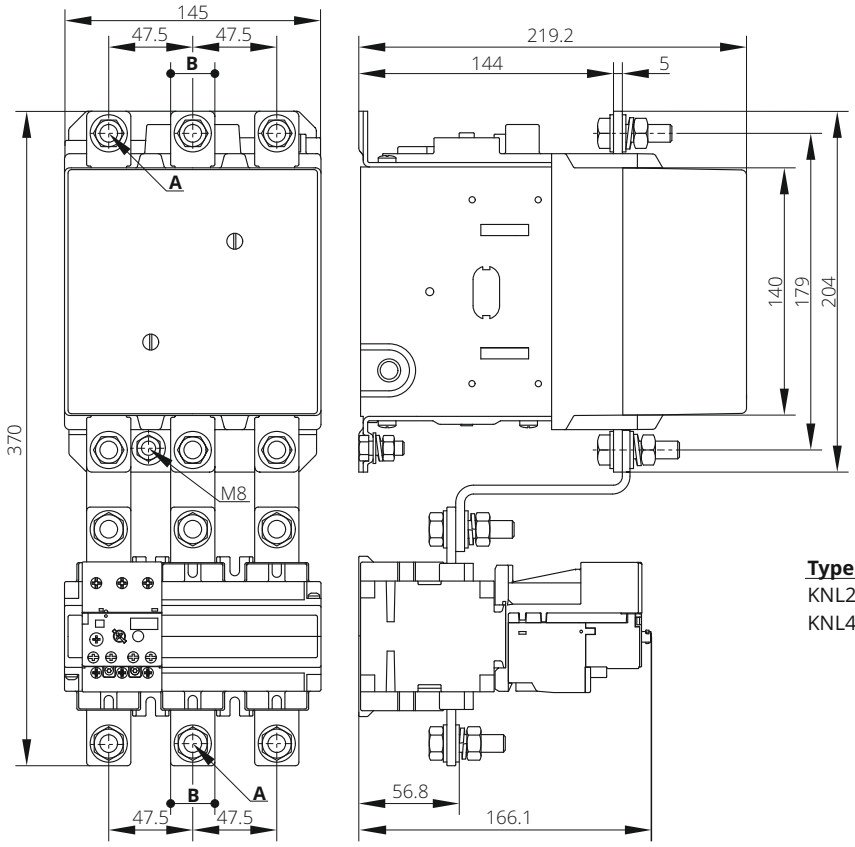

KNL250, KNL400 - drilling plan
3-pole

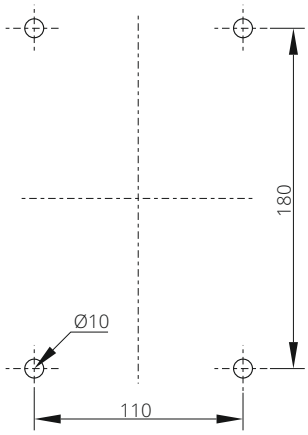

Type	A	B
KNL250	M10	20
KNL400	M10	25

KNL250, KNL400 – 4-pole

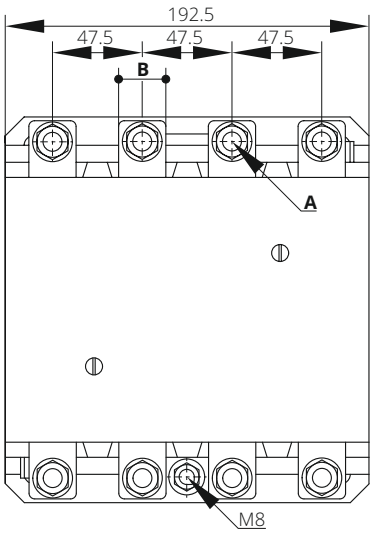

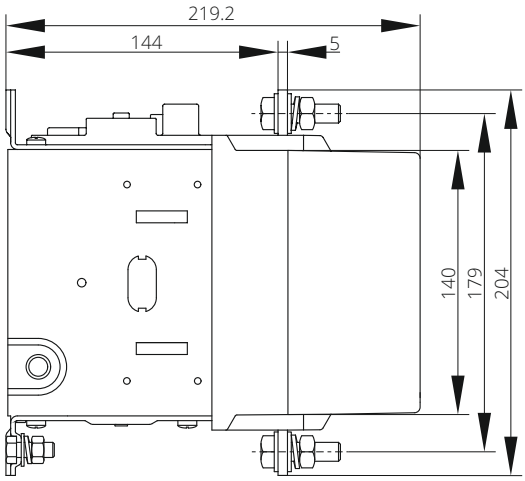

KNL250, KNL400 - drilling plan
4-pole

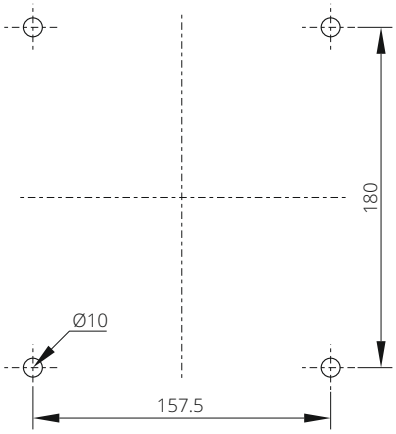

Type	A	B
KNL250	M10	20
KNL400	M10	25

KNL500, KNL630 – 3-pole

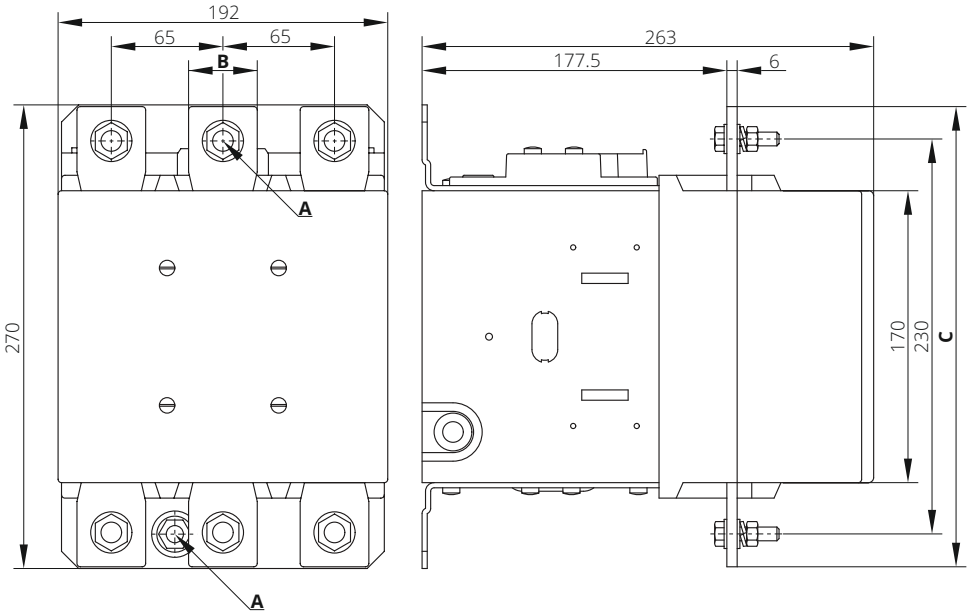

KNL500, KNL630 - drilling plan
3-pole

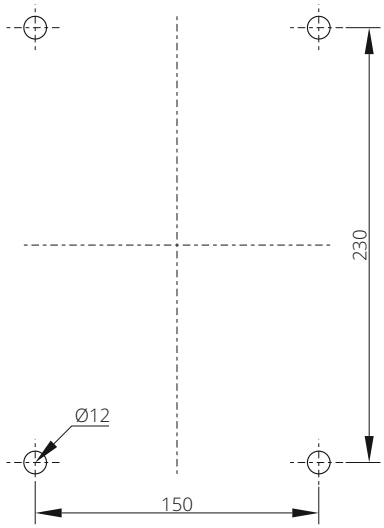

Type	A	B	C
KNL500	M10	35	265
KNL630	M12	40	270

KNL500, KNL630 – 4-pole

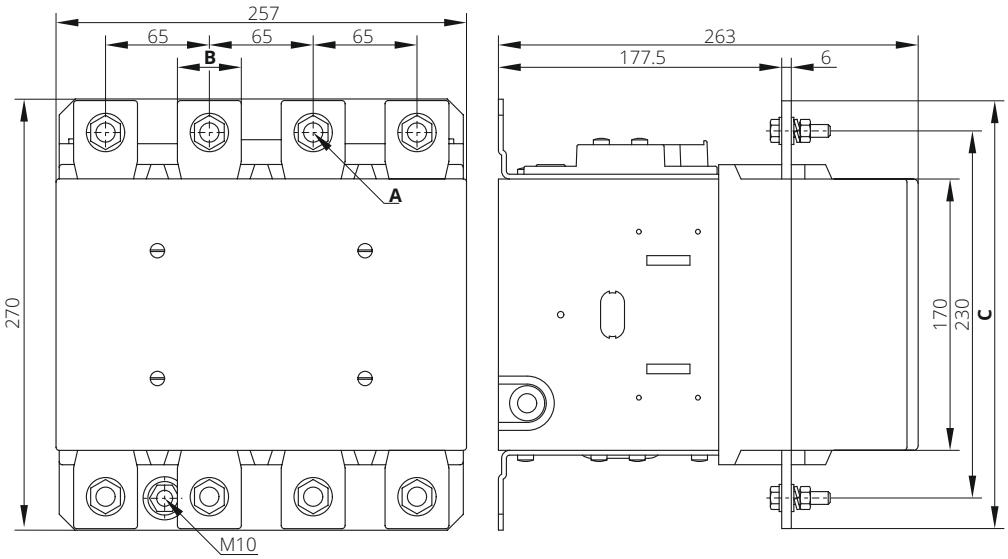

KNL500, KNL630 - drilling plan
4-pole

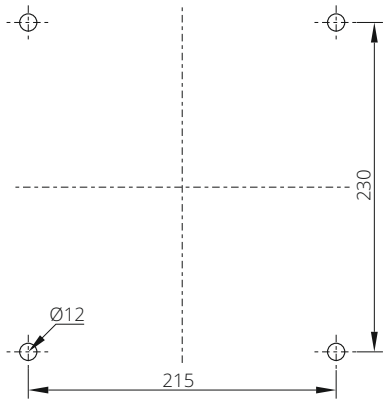

Type	A	B	C
KNL500	M10	35	265
KNL630	M12	40	270

KNL630/1000 – 3-pole

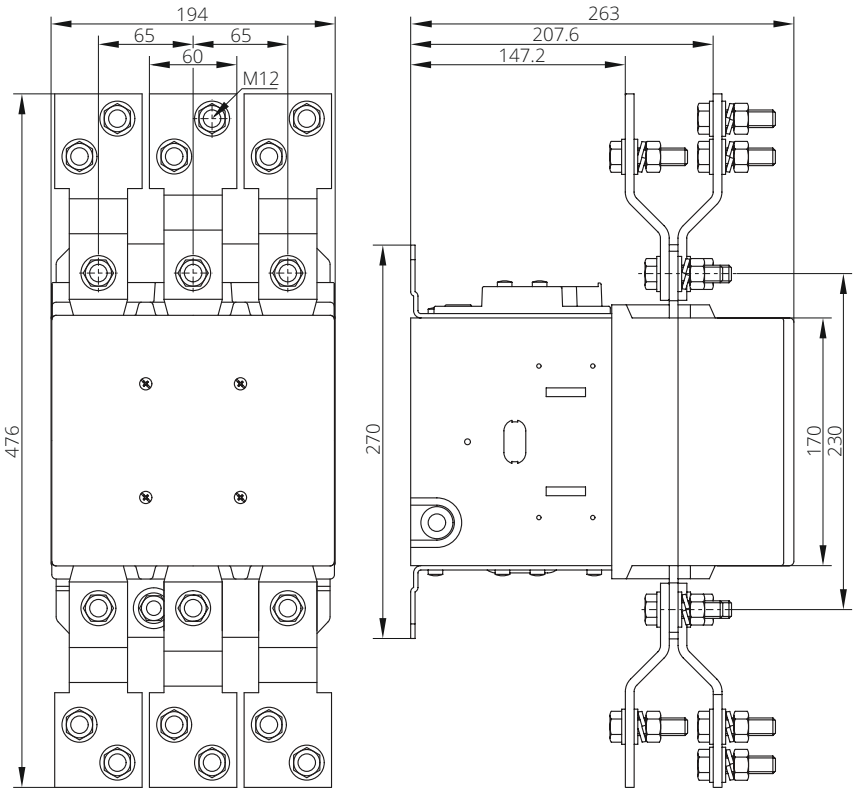

KNL630/1000 - drilling plan
3-pole

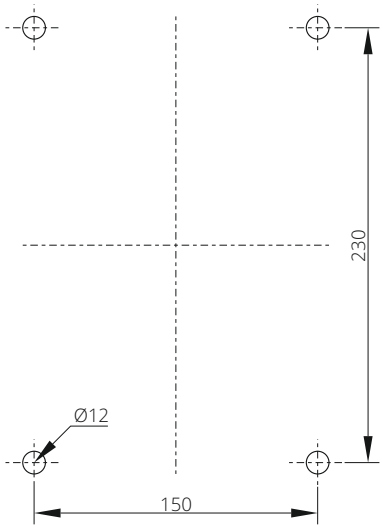

KNL630/1000 – 4-pole

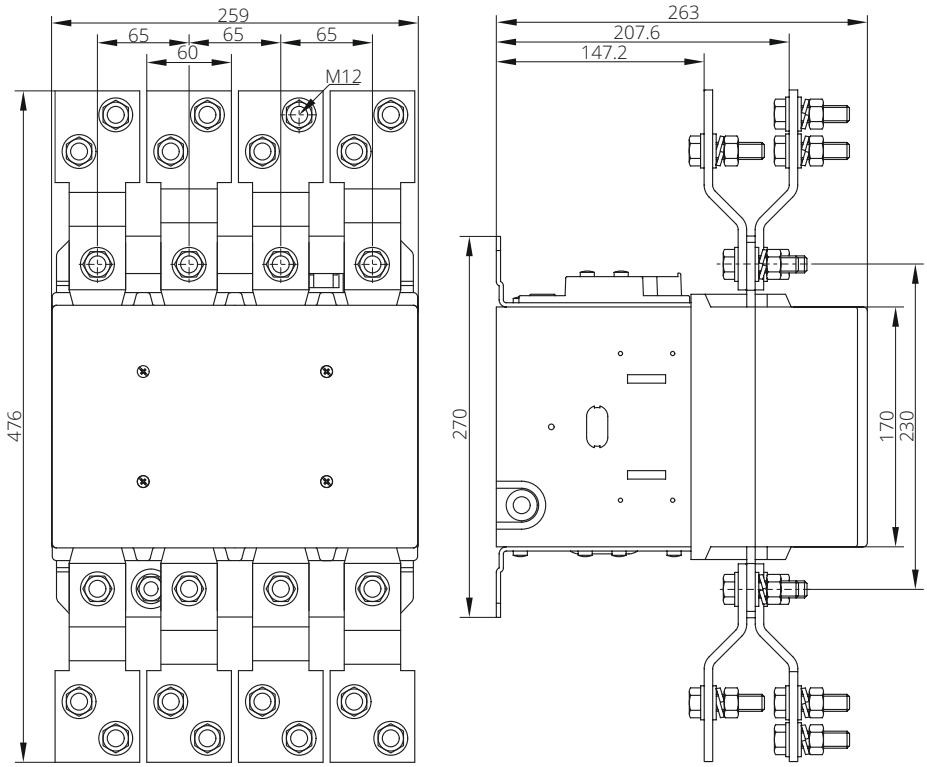
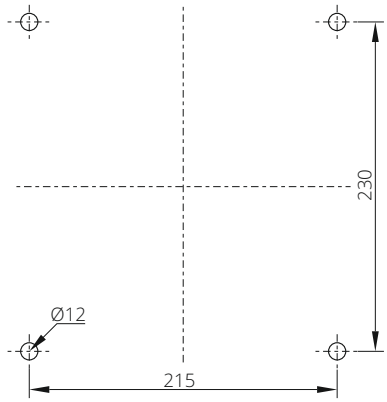
KNL630/1000 - drilling plan
4-pole